NEST CONSULTING GROUP

ADAPTABLE HOUSING ASSESSMENT REPORT

PROJECT:	64-70 Stapleton Avenue Casino NSW 2470
STAGE:	Development Application Phase
REFERENCE:	22073.5-AS4299
DATE:	25th October 2023
CLIENT:	Brewster Murray

PO Box 863 The Junction NSW 2291
0480 387 824
nicolas@nestcg.com.au
www.nestcg.com.au

Document Information

Issue	Description	Date
1	Preliminary issue	3 July 2023
2	Report updated to assess amended Sketch Design documentation	18 August 2023
3	Report updated to assess amended Sketch Design documentation	22 August 2023
4	Report updated to assess amended design documentation and accompany the Part 5 submission	9 October 2023
5	Report updated to assess amended design documentation and accompany the Part 5 submission	25 October 2023

Table of Contents

1. Introduction 4
   - 1.1 Project Description 4
   - 1.2 Intent of Report 4
   - 1.3 Limitations 4
   - 1.4 Documentation Assessed 5
2. Adaptable Housing Summary 6
   - 2.1 General 6
   - 2.2 Classification Levels 7
   - 2.3 Proposed Class C Adaptable Housing Units 7
3. Detailed Assessment 8
4. Detailed Assessment 11
5. Conclusion 23

ANNEXURE 1 – Documentation Assessed 24

1. Introduction

1.1 Project Description

The proposed development is understood to include the construction of eighteen (18) residential sole occupancy units and associated off-street carparking located at 64-70 Stapleton Avenue Casino NSW 2470.

As part of the proposed development, it is understood that two (2) units are to be provided as adaptable in accordance with the Class C provisions of the Adaptable Housing Australian Standard AS4299-1995.

Figure 1.1 – Site plan

1.2 Intent of Report

The purpose of this report is to provide an assessment of the proposed scope of works against the Class C provisions of the Adaptable Housing Australian Standard AS4299-1995.

Where non-compliances are identified, recommendations for resolution are to be provided, as applicable.

1.3 Limitations

This report does not include nor imply that an assessment of the following has been completed for the proposed works -

(a) Structural Adequacy, Design & Performance;

(b) Fire, Mechanical, Hydraulic and Electrical Services Design & Performance;

(c) Work Health & Safety Act 2011;

(d) Work Cover Authority Requirements;

(e) Service & Utilities Authority Requirements;

(f) The Disability Discrimination Act (DDA) 1992;

(g) National Construction Code Volume 1 2022;

(h) National Construction Code Volume 2 2022;

(i) National Construction Code Volume 3 2022 (Plumbing Code of Australia 2022);

(j) Livable Housing Australia (LHA) Design Guidelines Fourth Edition.

1.4 Documentation Assessed

This assessment is based upon the documentation referenced within **Annexure 1** of this report.

2. Adaptable Housing Summary

2.1 General

The purpose of the Adaptable Housing Australian Standard (AS4299-1995) is to provide guidelines on adaptable housing to those involved in designing or building new dwellings or renovations, including –

(a) Project home developers;

(b) Designers, builders, owners and users of private housing;

(c) Developers and designers of specialized housing such as retirement villages; and

(d) Public housing bodies.

Adaptable housing units shall be designed and constructed to meeting the following performance requirements-

(a) **Visibility** – To visitable by people who use wheelchairs, in that there must be at least one wheelchair accessible entry and path of travel to the living area and to a toilet that is either accessible or visitable.

(b) **Avoidance of level changes** – To have no steps and to avoid level changes where possible.

(c) **Maneuverability** – This shall include the following:
   (i) To provide space sufficient to maneuver a wheelchair within a living area, the kitchen and an accessible path of travel linking these areas.
   (ii) To provide space sufficient to maneuver a wheelchair within a bedroom, a bathroom and a toilet or to provide a design and details whereby after adaptation there will be sufficient space to maneuver a wheelchair within these facilities and an accessible path of travel linking these facilities to the entry, living and kitchen areas.

(d) **Ease of adaptation** – If the design for adaptation required further demolition of walls then these walls shall be non-loadbearing and free of electrical and plumbing services.

(e) **Ease of reach** – To provide electrical controls, taps, and some shelves and cupboards at levels to suit people who use wheelchairs.

(f) **Future laundry facilities** – To provide laundry facilities that after adaptation will be accessible to people who use wheelchairs. Those laundry facilities may be external to the adaptable housing unit, providing a wheelchair accessible path of travel is available from the adaptable housing unit to the laundry facilities.

2.2 Classification Levels

Adaptable Housing units may be designed and constructed to meet the following classification levels, which are categorized by the level of essential and desirable features incorporated –

Class A – All essential and all desirable features incorporated.

Class B – All essential and 50% desirable features incorporated, including all those notated 'first priority'.

Class C – All essential features incorporated.

2.3 Proposed Class C Adaptable Housing Units

The proposed development is understood to consist of two (2) units that are proposed to meet the Class C provisions of the Adaptable Housing Australian Standard AS4299-1995, being Unit 2 and Unit 6, as highlighted in the figure below.

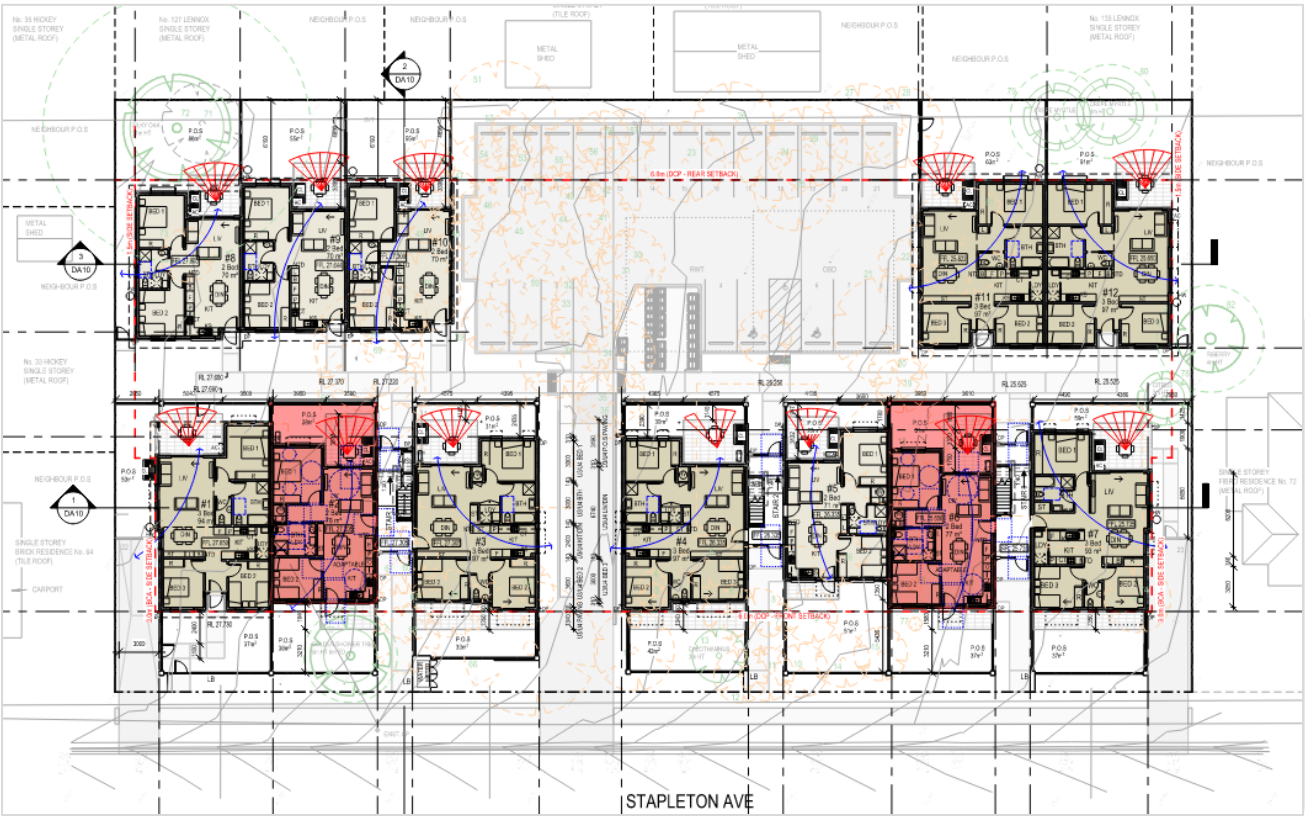

Figure 2.1 – Proposed adaptable units

3. Detailed Assessment

The following table summarises the status of compliance of the proposed design in the context of the Class C provisions of the Adaptable Housing Australian Standard AS4299-1995.

The status of compliance against each applicable feature assessed has adopted the following abbreviations.

C	Complies. The proposed design satisfies the requirements of the relevant Class C essential features of AS4299-1995.
CRA	Compliance readily achievable. There is insufficient information to determine that the proposed design satisfies all requirements of the relevant Class C essential features of AS4299-1995, however, may be satisfied by minor design amendments and/or design development.
DNC	Does not Comply. The proposed design does not satisfy the requirements of the relevant Class C essential features of AS4299-1995.
N/A	Not applicable. The requirements of the relevant Class C essential features of AS4299-1995 do not apply.

A detailed clause by clause assessment is outlined in Section 4 of this report.

AS4299-1995 - CLASS C ESSENTIAL FEATURE/S			STATUS			
Item No.	**Room / Item**	**Clause**	**C**	**CRA**	**DNC**	**N/A**
DRAWINGS						
1.	Provision of drawings showing the housing unit in its pre-adaptation and post-adaptation stages.	2.3		X		
SITING						
2.	A continuous accessible path of travel from street frontage and vehicle parking to entry complying with AS1428.1.	3.3.2		X		
LETTERBOXES IN ESTATE DEVELOPMENTS						
3.	Letterboxes to be on hard standing area connected to accessible pathway.	3.8		X		
PRIVATE CAR ACCOMODATION						
4.	Carparking space or garage min. area 6.0m x 3.8m.	3.7.2		X		
ACCESSIBLE ENTRY						
5.	Accessible entry.	4.3.1		X		
6.	Accessible entry to be level (i.e., max 1:40 slope).	4.3.2		X		
7.	Threshold to be low-level.	4.3.2		X		
8.	Landing to enable wheelchair maneuverability.	4.3.2		X		
9.	Accessible entry door to have 850mm min. clearance.	4.3.1		X		
10.	Door lever handles and hardware to AS1428.1.	4.3.4		X		

AS4299-1995 - CLASS C ESSENTIAL FEATURE/S			STATUS			
Item No.	Room / Item	Clause	C	CRA	DNC	N/A
INTERIOR: GENERAL						
11.	Internal doors to have 820mm min. clearance.	4.3.3		X		
12.	Internal corridors min. width of 1000mm.	4.3.7		X		
13.	Provision for compliance with AS1428.1 for door approaches.	4.3.7		X		
LIVING ROOM & DINING ROOM						
14.	Provision for circulation space of min. 2250mm diameter.	4.7.1		X		
15.	Telephone adjacent to GPO.	4.7.4		X		
16.	Potential illumination level min. 300 lux.	4.10		X		
KITCHEN						
17.	Minimum width 2.7m (1550mm clear between benches).	4.5.2	X			
18.	Provision for circulation at doors to comply with AS1428.1.	4.5.1		X		
19.	Provision for benches planned to include at least one work surface of 800mm length, adjustable in height from 750mm to 850mm or replaceable.	4.5.5		X		
20.	Refrigerator adjacent to work surface.	4.5.5		X		
21.	Kitchen sink adjustable to heights from 750mm to 850mm or replaceable.	4.5.6		X		
22.	Kitchen sink bowl max. 150mm deep.	4.5.6		X		
23.	Tap set capstan or lever handles or lever mixer.	4.5.6(e)		X		
24.	Tap set located within 300mm of front of sink.	4.5.6(e)		X		
25.	Cooktops to include either front or side controls with raised cross bars.	4.5.7		X		
26.	Cooktops to include isolating switch.	4.5.7		X		
27.	Work surface min. 800mm length adjacent to cooktop at same height.	4.5.7		X		
28.	Oven located adjacent to an adjustable height or replaceable work surface.	4.5.8		X		
29.	GPOs to comply with AS1428.1. At least one double GPO within 300mm of front of work surface.	4.5.11		X		
30.	GPO for refrigerator to be easily reachable when the refrigerator is in its operating position.	4.5.11		X		
31.	Slip resistant floor surface.	4.5.4		X		
MAIN BEDROOM						
32.	At least one bedroom of area sufficient to accommodate queen size bed and wardrobe and circulation space requirements of AS1428.2.	4.6.1		X		

AS4299-1995 - CLASS C ESSENTIAL FEATURE/S			STATUS			
Item No.	Room / Item	Clause	C	CRA	DNC	N/A
BATHROOM						
33.	Provision for bathroom area to comply with AS1428.1.	4.4.1		X		
34.	Slip resistant floor surface.	4.4.2		X		
35.	Shower recess-no hob. Minimum size 1160 x 1100 to comply with AS1428.1.	4.4.4(f)		X		
36.	Shower area waterproofed to AS3740 with floor to wall to waste.	4.4.4(f)		X		
37.	Recessed soap holder.	4.4.4(f)		X		
38.	Shower taps positioned for easy reach to access side of shower sliding track.	4.4.4(f)		X		
39.	Provision for adjustable, detachable hand held shower rose mounted on a slider grabrail or fixed hook (plumbing and wall-strengthening provision).	4,4,4(h)		X		
40.	Provision for grabrail in shower to comply with AS1428.1.	4.4.4(h)		X		
41.	Tap sets to be capstan or lever handles with single outlet.	4.4.4(c)		X		
42.	Provision for washbasin with clearances to comply with AS1428.1.	4.4.4(g)		X		
43.	Double GPO beside mirror.	4.4.4(d)		X		
TOILET						
44.	Provision of either 'visitable toilet' or accessible toilet.	4.4.3		X		
45.	Provision to comply with AS1428.1.	4.4.1		X		
46.	Location of WC pan at correct distance from fixed walls.	4.4.3		X		
47.	Provision for grab rail zone.	4.4.4(h)		X		
48.	Slip resistance floor surface.	4.4.2		X		
LAUNDRY						
49.	Circulation at doors to comply with AS1428.1.	4.8		X		
50.	Provision for adequate circulation space in front of or beside appliances (min. 1550mm depth).	4.8		X		
51.	Provision for automatic washing machine.	4.8(c)		X		
52.	Where clothes line is provided, an accessible path of travel to this.	4.8(a)		X		
53.	Double GPO.	4.8(g)		X		
54.	Slip-resistant floor surface.	4.9.1		X		
DOOR LOCKS						
55.	Door hardware operable with one hand, located 900-1100mm above floor.	4.3.4		X		

4. Detailed Assessment

A detailed assessment of the proposed scope of works in the context of the Class C provisions of the Adaptable Housing Australian Standard (AS4299-1995) has been undertaken, as outlined below.

The status of compliance against each applicable AS4299-1995 clause assessed has adopted the following abbreviations.

C	Complies. The proposed design satisfies the requirements of the relevant Class C essential features of AS4299-1995.
CRA	Compliance readily achievable. There is insufficient information to determine that the proposed design satisfies all requirements of the relevant Class C essential features of AS4299-1995, however, may be satisfied by minor design amendments and/or design development.
DNC	Does not Comply. The proposed design does not satisfy the requirements of the relevant Class C essential features of AS4299-1995.
FIR	Further Information Required. There is insufficient information to undertake a detailed assessment of the proposed design against the relevant Class C essential features of AS4299-1995.
Note	Information is provided to guide the reader and not as specific assessment of the relevant Class C essential features of AS4299-1995.
N/A	Not applicable. The requirements of the relevant Class C essential features of AS4299-1995 do not apply.

DRAWINGS			
Clause No.	**Requirement/s**	**Comment/s**	**Status**
2.3	Drawings showing the housing unit in its pre-adaptation and post-adaptation stages shall be provided. A description of how the adaptation is to be achieved shall also be provided.	Drawings showing the housing unit in its pre-adaptation and post-adaptation stages are to be provided. A description of how the adaptation is to be achieved shall also be provided.	CRA

SITING			
Clause No.	**Requirement/s**	**Comment/s**	**Status**
3.3.2	An accessible path of travel from the street frontage carparking area or drop-off point shall be provided to all adaptable housing units. As a minimum, this accessible path shall comply with AS1428.1 and shall be continuous, slip-resistant, hard-surfaced and shall not incorporate any step, stairway or other impediment which would prevent it from being safely negotiated by people with disabilities.	An accessible path of travel from the street frontage and carparking area shall be provided to the proposed adaptable units. Consideration shall be provided to ensure the accessible path of travel, including operation of the garage door complies with the requirements of AS1428.1.	CRA

LETTERBOXES IN ESTATE DEVELOPMENTS			
Clause No.	**Requirement/s**	**Comment/s**	**Status**
3.8	Letterboxes shall comply with Australia / New Zealand Post regulations. Where letterboxes are centrally located in residential estate developments they should be adjacent to the street entry. Letterboxes and parcel racks should be lockable.	Letterboxes shall comply with Australia / New Zealand Post regulation and letterboxes and parcel lockers should be lockable. The letterboxes are identified as being centrally located adjacent to the street entry to each corresponding Class 2 building containing the adaptable units.	CRA

PRIVATE CAR ACCOMODATION			
Clause No.	**Requirement/s**	**Comment/s**	**Status**
3.7.2	Garages and carports shall have minimum internal dimensions of 6.0m x 3.8m. A 2.5m internal vertical clearance is desirable. A garage may be reduced if a hard surfaced level outside space of minimum dimensions 5.4m x 3.8m is provided as a sheltered carpark, or can be provided in the future. NOTE: A level surface includes surfaces with a gradient of up to 1:40.	The carpark is identified as being provided with at least one car parking space for each proposed adaptable unit. The proposed accessible car spaces are indicated as being proposed to be provided in accordance with the requirements of AS/NZS 2890.6-2009.	CRA

ACCESSIBLE ENTRY			
Clause No.	**Requirement/s**	**Comment/s**	**Status**
4.3.1	At least one entry door complying with AS1428.2 shall be provided.	The entry door to the proposed adaptable units is to be provided in accordance with AS1428.2, appropriate to clearances and circulation space/s.	CRA
4.3.2	The accessible entry door shall be provided with a landing outside the door with a maximum fall of 1:40 and a low threshold at the entry door to exclude water.	The entry doors to the proposed adaptable units are to be provided with a level landing.	CRA
4.3.2	The threshold shall allow for the smooth transition of a wheelchair.	The thresholds to the adaptable unit entry doors are to be detailed to allow for a smooth transition of a wheelchair. Consideration for the abutment of surfaces in accordance with Clause 7.2 of AS1428.1 is to be provided, whereby the construction tolerances shall be as follows – (a) 3mm vertical; or (b) 5mm, provided the edges have a beveled or rounded edge to reduce the likelihood of tripping.	CRA

ACCESSIBLE ENTRY			
Clause No.	**Requirement/s**	**Comment/s**	**Status**
4.3.2	The landing shall be of sufficient area to enable wheelchair maneuverability.	The landings to the proposed adaptable unit entry doors are to be demonstrated as having sufficient area to enable wheelchair maneuverability.	CRA
4.3.1	Accessible entry door to have 850mm min. clearance.	The entry doors of proposed adaptable units are to be provided with a clear opening width of min. 850mm.	CRA
4.3.4	Door lever handles and hardware shall be not less than 900mm nor more than 1100mm above the plane of the finished floor and shall be in accordance with AS1428.1.	Details are to be provided to ensure the door lever handles and hardware are of a 'D' type handles and located 900mm-1100mm above the finished floor in accordance with Clause 13.5 of AS1428.1.	CRA

INTERIOR: GENERAL			
Clause No.	**Requirement/s**	**Comment/s**	**Status**
4.3.3	Internal doors throughout shall have a minimum clear opening of 820mm, except where otherwise described.	Internal doors throughout the adaptable units are to be provided with clear opening widths of not less than 820mm.	CRA
4.3.7	Internal corridors shall have a minimum width of 1000mm.	Internal corridors are to be provided with a minimum width of 1000mm.	CRA
4.3.7	After adaptation, circulation spaces at doorways shall comply with AS1428.1.	After adaptation, circulation spaces at doorways shall comply with AS1428.1.	CRA

LIVING ROOM & DINING ROOM			
Clause No.	**Requirement/s**	**Comment/s**	**Status**
4.7.1	Provision shall be made for circulation space to enable a 360-degree wheelchair turn after the furniture has been placed. NOTE - An area of 2250mm minimum diameter after the furniture has been placed will satisfy this requirement.	Adequate spatial provision to enable a 360-degree wheelchair turn is to be provided within the living rooms.	CRA
4.7.4	A telephone outlet shall be provided in the living-dining area. This should be adjacent to a GPO.	Details are to be provided to ensure that a telephone outlet is provided adjacent to a GPO within the living-dining areas, at the post adaptation stage.	CRA
4.10	Provision shall be made for the illumination level of 300-350 lux for people with visual impairment.	Details are to be provided to ensure that provision for the illumination level of 300-350 lux is provided within the living & dining rooms, at the post adaptation stage.	CRA

KITCHEN			
Clause No.	**Requirement/s**	**Comment/s**	**Status**
4.5.2	Minimum clearances in front of appliances and between base cabinets shall be provided at the outset. A minimum clearance of 1550mm shall be maintained between all opposing base cabinets, appliances and walls to allow for a 180 degree turn by a person in a wheelchair.	The clearance between the benches within the kitchen of each adaptable unit are indicated as being not less than 1550mm.	C
4.5.1	The potential configuration of the kitchen area after adaptation shall be demonstrated. The final configuration of the kitchen after adaptation shall be shown to comply with Clause 4.5.3, whereby circulation spaces at door shall comply with AS1428.1.	Details are to be provided to ensure circulation at doors within the kitchen comply with AS1428.1, at post adaptation.	CRA
4.5.5	At least one section of the work surface, not less than 800mm in length, should be adjustable or replaceable as a unit at variable heights within the range 750mm to 850mm above the finished floor surface.	Details are to be provided to ensure at least one section of the work surface, not less than 800mm in length, is provided adjustable or replaceable as a unit at variable heights within the range 750mm to 850mm above the finished floor surface.	CRA
	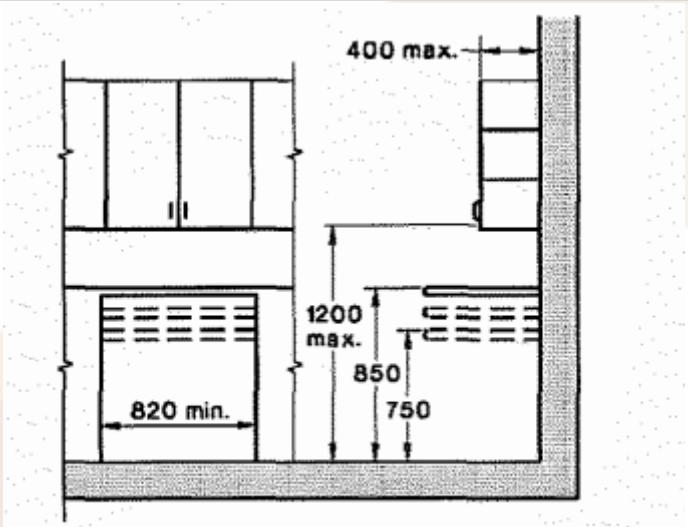 (b) After removal of cabinets		
4.5.5	A refrigerator shall be located adjacent to a work surface.	Details are to be provided to ensure the refrigerator within the adaptable units is located adjacent to a work surface.	CRA
4.5.6	The kitchen sink shall be adjustable or replaceable as a unit at variable heights within the range 750mm-850mm above the finished floor surface.	Details are to be provided to ensure the kitchen sink within the adaptable units can be adjustable or replaceable as a unit at variable heights within the range 750mm-850mm above the finished floor surface.	CRA

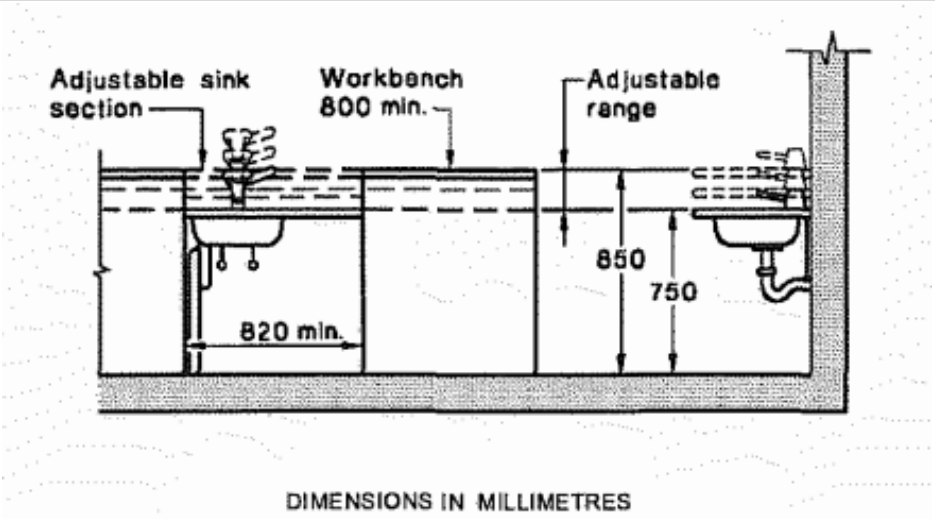

FIGURE 4.9 SINKS AFTER MODIFICATION

KITCHEN			
Clause No.	**Requirement/s**	**Comment/s**	**Status**
4.5.6	The maximum depth of the bowl of the sink should be 150mm. This would only apply to the main bowl of a double bowl sink.	Details are to be provided to ensure the maximum depth of the bowl of the sink is 150mm.	CRA
4.5.6(e)	Taps shall comply with AS1428.1.	Details are to be provided to ensure taps comply with AS1428.1 – (a) Taps shall have lever handles, sensor plates, or similar controls. (b) Lever handles shall have not less than 50mm clearance from an adjacent surface. (c) Where separate taps are provided for hot and cold water, the hot water tap shall be placed to the left of the cold water tap for horizontal configurations, or above the cold water tap for vertical configurations. (d) Where hot water is provided, the water shall be delivered through a mixing spout.	CRA
4.5.6(e)	Taps or their operating handles shall be within 300mm of the front of the sink to allow for ease of operation.	Details are to be provided to ensure taps or their operating handles are within 300mm for the front of the sink.	CRA
4.5.7	Cooktops shall have controls which do not require reaching over the hotplates to adjust them. Control shall have raised cross-bars for ease of grip.	Details are to be provided to ensure the cooktops have controls which do not require reaching over the hotplates to adjust them.	CRA
4.5.7	Cooktops should be provided with isolating switches or gas stop valves which can be easily and safely operated while the cooktop is in use.	Details are to be provided to ensure the cooktops are provided with isolating switches or gas stop valves.	CRA

KITCHEN			
Clause No.	**Requirement/s**	**Comment/s**	**Status**
4.5.7	Cooktops shall have an adjacent work surface of 800mm minimum length at the same height.	Details are to be provided to ensure the cooktops are provided with an adjacent work surface of min. 800mm length, at the same height as the cooktop.	CRA
4.5.8	Ovens shall be located adjacent to a work surface that is not less than 800mm in length, and is adjustable or replaceable as a unit at variable heights within the range 750mm to 850mm above the finished floor surface.	Details are to be provided to ensure the ovens are located adjacent to a work surface that is not less than 800mm in length, and is adjustable or replaceable as a unit at variable heights within the range 750mm to 850mm above the finished floor surface.	CRA
	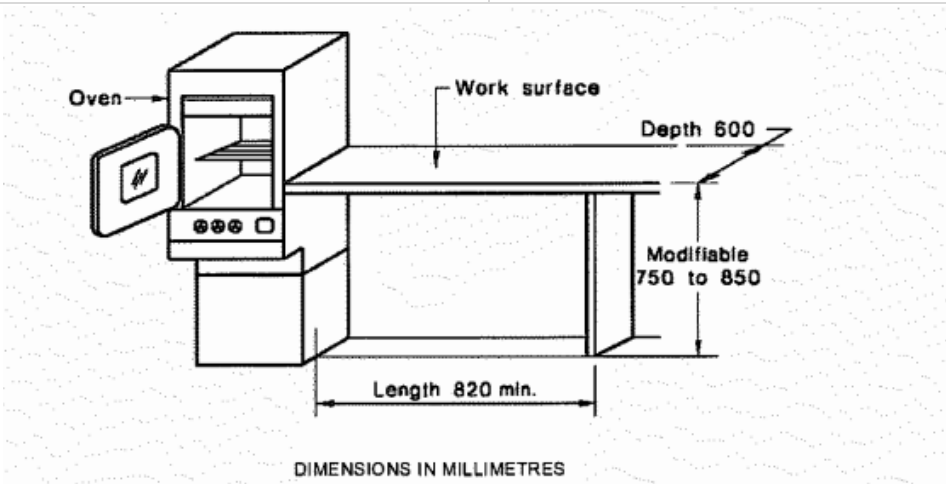 FIGURE 4.10 OVENS		
4.5.11	General purpose outlets shall be located to comply with AS1428.1. At least one double general purpose outlet shall be located with a horizontally accessible reach over a work surface at a maximum of 300mm from the front of the work surface.	Details are to be provided to ensure the GPOs are located not less than 900mm nor more than 1100mm above the finished floor and not less than 500mm from internal corners in accordance with AS1428.1. At least one double general purpose outlet shall be located with a horizontally accessible reach over a work surface at a maximum of 300mm from the front of the work surface.	CRA
4.5.11	The GPO for the refrigerator shall be easily reachable when the refrigerator is in its operating position.	Details are to be provided to ensure the GPO for the refrigerator is easily reachable when the refrigerator is in operating position.	CRA
4.5.4	The floor surface shall be slip-resistant to comply with AS/NZS 3661.1.	Floor surfaces within the kitchens of the adaptable unit are to be documented to ensure they are slip resistant in accordance with AS/NZS 3661.1.	CRA

MAIN BEDROOM			
Clause No.	**Requirement/s**	**Comment/s**	**Status**
4.6.1	At least one bedroom shall be capable of accommodating a queen size bed and a wardrobe and the circulation space requirements of AS1428.2 clear of wardrobe fixtures.	At least one bedroom within each adaptable unit is to be provided with adequate clearances to accommodate a queen size bed, wardrobe and circulation space requirements of AS1428.2.	CRA

BATHROOM			
Clause No.	**Requirement/s**	**Comment/s**	**Status**
4.4.1	The bathroom area shall be adaptable, at a minimum cost, to potentially comply with AS1428.1.	The bathroom area shall be adaptable, at a minimum cost, to potentially comply with AS1428.1.	CRA
4.4.2	Floor surfaces shall be slip-resistant to comply with AS/NZS 3661.1.	Floor surfaces within the bathroom are to be documented to ensure they are slip resistant in accordance with AS/NZS 3661.1.	CRA
4.4.4(f)	The shower compartment shall be a minimum size of 1160 x 1100mm. Any waterproofing system used in the shower compartment shall be such that it can be extended to suit the larger, hobless configuration as required by AS1428.1.	The shower compartment within the bathroom is to be provided with a minimum size of 1160mm x 1100mm. Details are to be provided to ensure the waterproofing system used in the shower compartment can be extended to suit the larger, hobless configuration as required by AS1428.1.	CRA
4.4.4(f)	The shower area shall be waterproofed to comply with AS3740.	Details are to be provided to ensure the shower areas are waterproofed to comply with the requirements of AS3740. This is to be provided from the outset at the pre-adaptation stage.	CRA
4.4.4(f)	The soap holder shall be recessed.	Details are to be provided to ensure that the soap holder within each bathroom is recessed.	CRA
4.4.4(f)	The position of the shower taps shall be such that the clearances and heights required by AS1428.1 are achieved.	Details are to be provided to ensure that the position of the shower taps shall be such that the clearances and heights required by AS1428.1 are achieved.	CRA

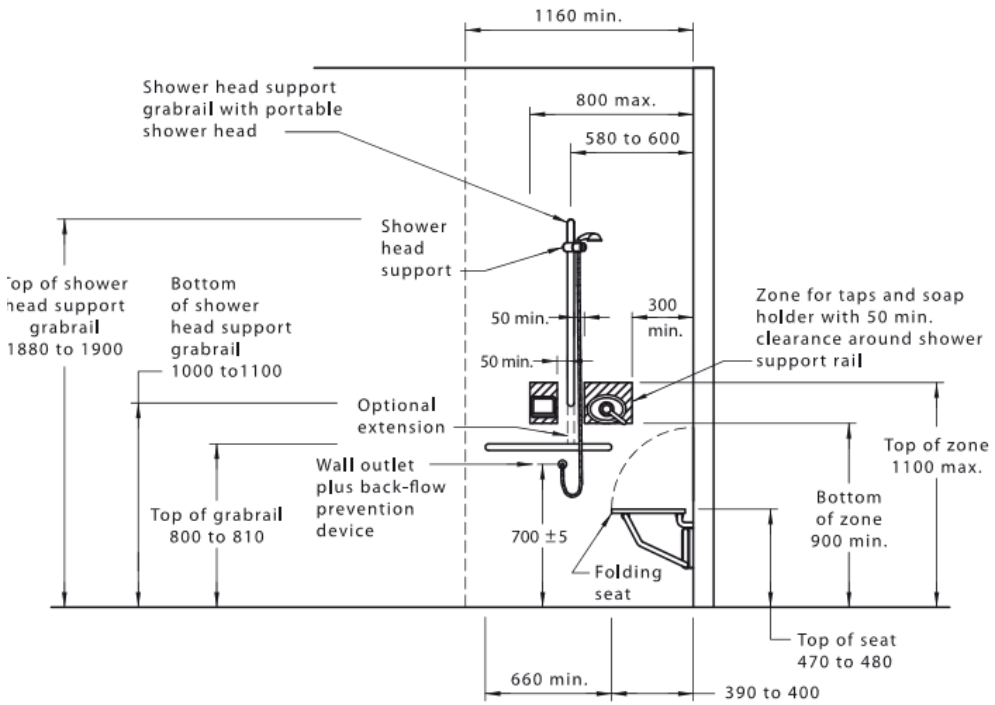

FIGURE 48 SHOWER RECESS FITTINGS—ELEVATION

BATHROOM			
Clause No.	**Requirement/s**	**Comment/s**	**Status**
4.4.4(h)	Provision for adjustable, detachable hand held shower rose mounted on a slider grabrail or fixed hook (plumbing and wall-strengthening provision).	Details are to be provided to ensure provision for an adjustable, detachable hand held shower rose mounted on a slider grabrail or fixed hook (plumbing and wall-strengthening provision), is provided.	CRA
4.4.4(h)	Provision for grabrails shall be made in the modified configurations as required by AS1428.1.	Details are to be provided to ensure provision for grab rails is provided within shower area to meet the future requirements of AS1428.1.	CRA

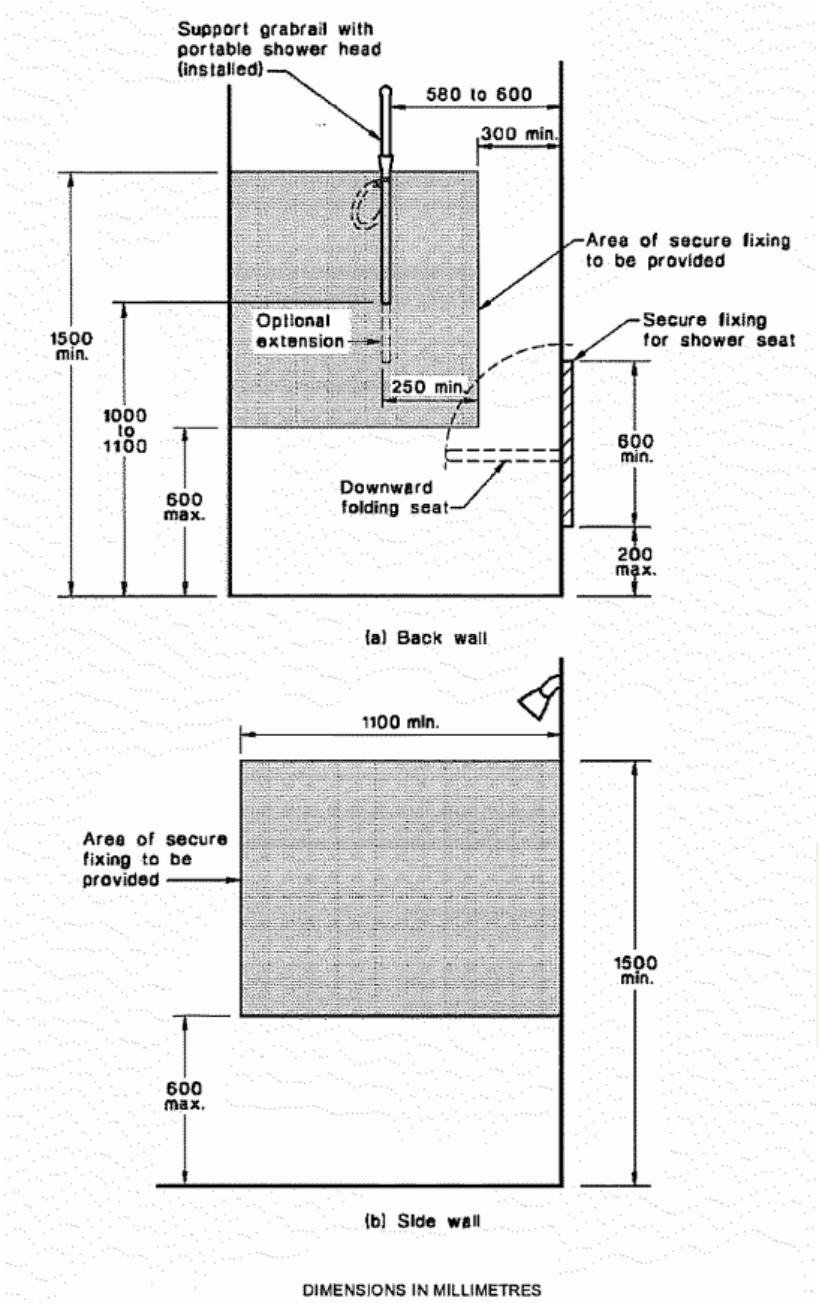

FIGURE 4.6 REINFORCED AREAS FOR SUBSEQUENT INSTALLATION OF GRABRAILS IN SHOWER COMPARTMENTS

BATHROOM			
Clause No.	**Requirement/s**	**Comment/s**	**Status**
4.4.4(c)	Tap sets throughout shall have capstan or lever handles.	Details are to be provided to ensure the tap sets throughout the bathroom are provided as capstan or lever handles, at the post adaptation stage.	CRA

BATHROOM			
Clause No.	**Requirement/s**	**Comment/s**	**Status**
4.4.4(g)	The washbasin shall be located such that circulation spaces to adjacent doors, WC pans and other components, and knee clearances are either provided in accordance with AS1428.1 or will be provided at adaptation.	Details are to be provided to ensure the washbasin within the bathroom is provided to meet the required circulation spaces to adjacent doors, WC pans and other components, and knee clearances are provided in accordance with AS1428.1 at post adaptation stage.	CRA
	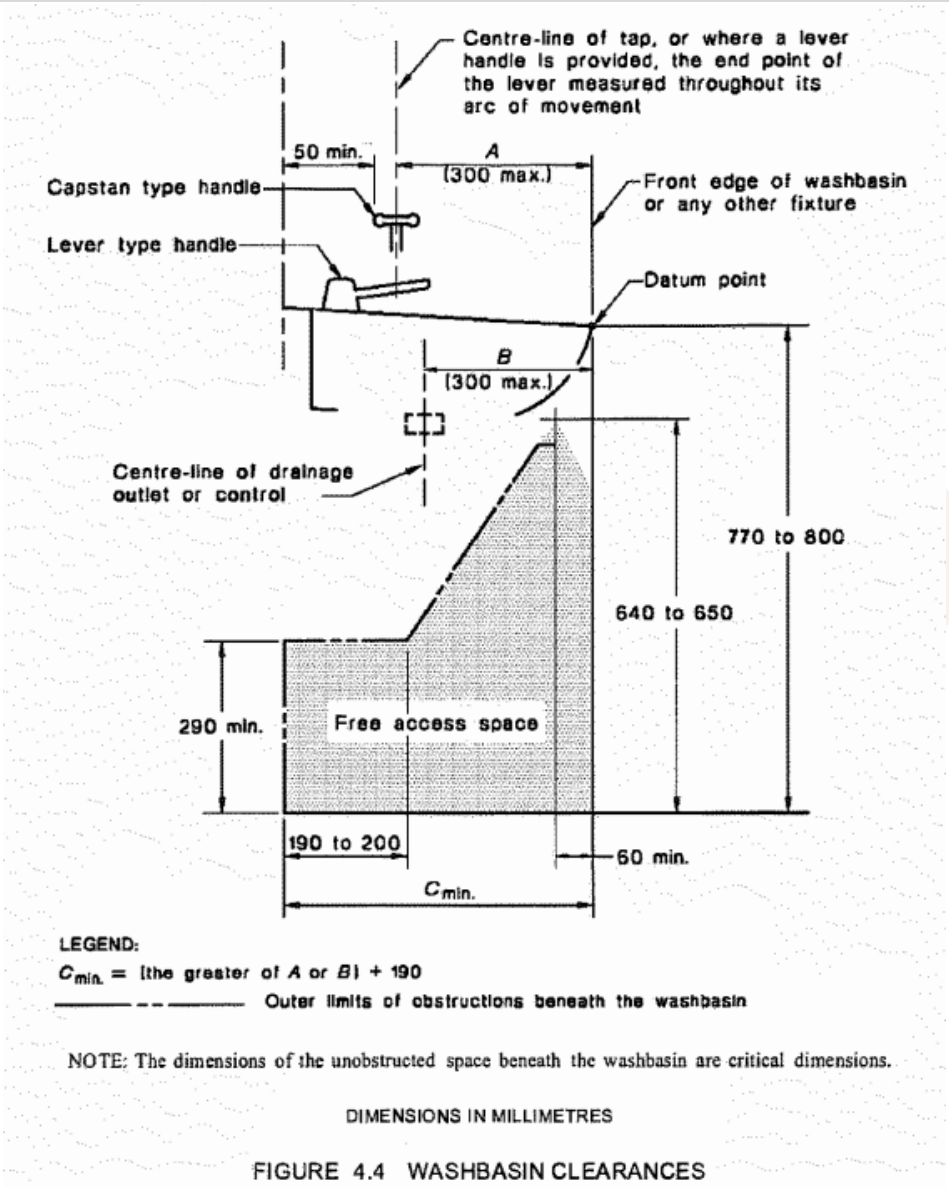 FIGURE 4.4 WASHBASIN CLEARANCES		
4.4.4(d)	A double GPO shall be located adjacent to the mirror.	Details are to be provided to ensure that a double GPO is provided adjacent to the mirror within the bathrooms.	CRA

TOILET			
Clause No.	**Requirement/s**	**Comment/s**	**Status**
4.4.3	Each housing unit shall be provided with either a visitable toilet or an accessible toilet.	The bathroom within each adaptable unit is to be provided with provision to be adapted to made accessible.	CRA
4.4.1	The toilet shall be adaptable, at a minimum cost, to potentially comply with AS1428.1.	The bathroom within each adaptable unit is to be adaptable to potentially comply with AS1428.1.	CRA
4.4.3	The WC pan shall initially be positioned at the correct distance from any fixed walls.	The WC pan is to be located within the permitted tolerance of 450-460mm from the adjacent fixed wall. It is recommended that future provision for a WC pan is provided at the corner of the room to meet the required distances from any fixed walls.	CRA
	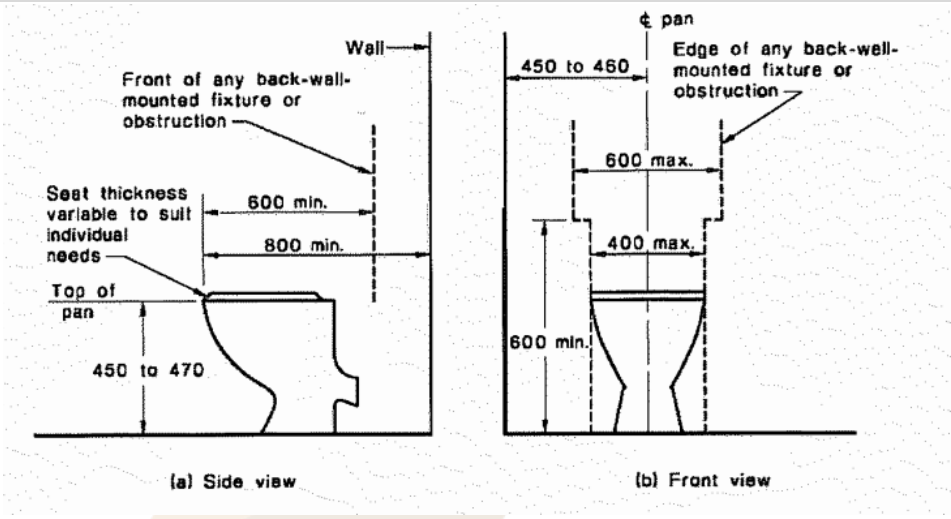		
4.4.4(h)	Provision for grabrails shall be made in the modified configurations as required by AS1428.1.	Details are to be provided to ensure provision for grab rails are provided for future adaptation, to meet the requirements of AS1428.1.	CRA
4.4.2	Floor surfaces shall be slip-resistant to comply with AS/NZS 3661.1.	Floor surfaces within the toilet are to be documented to ensure they are slip resistant in accordance with AS/NZS 3661.1.	CRA

LAUNDRY			
Clause No.	**Requirement/s**	**Comment/s**	**Status**
4.8	If a separate room is used for a laundry, circulation spaces at doors shall be in accordance with AS1428.1.	The laundry is to be provided with circulation space at doors to comply with the requirements of AS1428.1.	CRA
4.8	Provision for adequate circulation space shall be made in front of or beside appliances and under or adjacent to the tub to enable people who use wheelchairs to use all the facilities. NOTE - An area of 1550mm diameter will satisfy this requirement.	The laundry is to be provided with an area of 1550mm in front of the laundry appliances or adjacent to the tub.	CRA
4.8(e)	Provision shall be made for an automatic washing machine.	Details are to be provided to ensure that a double GPO is provided within the laundry room.	CRA
4.8(a)	There shall be a clothes drying facility. Where a clothes line is provided, an accessible path of travel shall be provided to the clothes line.	Details are to be provided to ensure a clothes drying facility is provided. Where a clothesline is provided, an accessible path of travel shall be provided to the clothes line.	CRA
4.8(g)	A double GPO shall be provided as a minimum.	Details are to be provided to ensure that a double GPO is provided within the laundry rooms.	CRA
4.9.1	Floor surfaces shall be slip resistant to comply with AS/NZS 3661.1.	Floor surfaces within the laundry rooms are to be documented to ensure they are slip resistant in accordance with AS/NZS 3661.1.	CRA

DOOR LOCKS			
Clause No.	**Requirement/s**	**Comment/s**	**Status**
4.3.4	Door handle and related hardware shall be of the type that allows the door to be unlocked and opened with one hand, at a height not less than 900mm nor more than 1100mm above the plane of the finished floor.	Door handles and related hardware to be unlocked and opened with one hand, at a height not less than 900mm nor more than 1100mm above the plane of the finished floor.	CRA

5. Conclusion

In concluding the review undertaken, it is considered that based on the documentation provided (as referenced in Annexure 1), the proposed scope of works is capable of complying with the Class C provisions of the Adaptable Housing Australian Standard AS4299-1995.

Nicolas Hurtado

Director | **NEST CONSULTING GROUP**

Grad.Dip. Fire Safety Engineering (UWS)
B.Eng. Construction (UTS)
Cert. IV Access Consulting (ATA)
AIBS Associate Member
ACAA Associate Member

ANNEXURE 1 – Documentation Assessed

This assessment is based on the following documentation –

Discipline	Architectural
Organisation	Brewster Murray
Documentation Type	Plans

Plan No.	Title	Revision	Date
DA04	SITE PLAN	D	17.10.2023
DA05	GROUND FLOOR PLAN	D	17.10.2023
DA06	FIRST FLOOR PLAN	D	17.10.2023