NEST CONSULTING GROUP

ACCESSIBLITY ASSESSMENT REPORT

PROJECT:	64-70 Stapleton Avenue Casino NSW 2470
STAGE:	Development Application Phase
REFERENCE:	22073.5-Access
DATE:	25th October 2023
CLIENT:	Brewster Murray

PO Box 863 The Junction NSW 2291
0480 387 824
nicolas@nestcg.com.au
www.nestcg.com.au

Document Information

Issue	Description	Date
1	Preliminary issue	3 July 2023
2	Report updated to assess amended Sketch Design documentation	18 August 2023
3	Report updated to assess amended Sketch Design documentation	22 August 2023
4	Report updated to assess amended design documentation and accompany the Part 5 submission	9 October 2023
5	Report updated to assess amended design documentation and accompany the Part 5 submission	25 October 2023

Table of Contents

1. Introduction 4
   - 1.1 Project Description 4
   - 1.2 Intent of Report 4
   - 1.3 Limitations 4
   - 1.4 Documentation Assessed 4
2. Building Description 5
   - 2.1 General 5
   - 2.2 Classification/s 6
   - 2.3 Rise in Storeys 6
   - 2.4 Effective Height 6
   - 2.5 Type of Construction 6
   - 2.6 Principal Pedestrian Entrance/s 6
   - 2.7 Exemptions 7
3. Detailed Assessment 8
4. Conclusion 14

ANNEXURE 1 – Documentation Assessed 15

ANNEXURE 2 – Summary of Technical Requirements 16

1. Introduction

1.1 Project Description

The proposed development is understood to include the construction of eighteen (18) residential sole occupancy units and associated off-street carparking located at 64-70 Stapleton Avenue Casino NSW 2470.

1.2 Intent of Report

The purpose of this report is to provide an assessment of the proposed development, against the relevant accessibility deemed-to-satisfy provisions of the Building Code of Australia (BCA) Volume One 2022 (i.e., Part D4, E3D7 - E3D8, F4D5 - F4D7 & F4D12).

Where non-compliances are identified, recommendations for resolution are to be provided in the form of a deemed to satisfy solution and/or performance-based solution, as applicable.

1.3 Limitations

This report does not include nor imply that an assessment of the following has been completed for the proposed works -

(a) Structural Adequacy, Design & Performance;

(b) Fire, Mechanical, Hydraulic and Electrical Services Design & Performance;

(c) Work Health & Safety Act 2011;

(d) Work Cover Authority Requirements;

(e) Service & Utilities Authority Requirements;

(f) The Disability Discrimination Act (DDA) 1992;

(g) The National Construction Code Volume 2 2022;

(h) National Construction Code Volume 3 2022 (Plumbing Code of Australia 2022);

(i) Any Deemed-to-Satisfy provisions other than those contained within the relevant accessibility Deemed-to-Satisfy provisions of the National Construction Code (i.e. Part D4, E3D7 - E3D8, F4D5 - F4D7 & F4D12);

(j) The relevant energy efficiency Deemed-to-Satisfy provisions as contained within the National Construction Code (i.e. Section J);

1.4 Documentation Assessed

This assessment is based upon the documentation referenced within **Annexure 1** of this report.

2. Building Description

2.1 General

The proposed multi dwelling housing development is understood to include the construction of eighteen (18) residential sole occupancy units and associated off-street carparking.

The site is to consist of a combination of Class 1a and Class 2 buildings, with the distribution of sole occupancy units associated with each building noted as follows –

(a) Class 1a – Units 1 & 8-12; and

(b) Class 2 – Units 2-7, 13-18.

Refer distribution of buildings in the figure below, with Class 1a buildings highlighted **blue** and Class 2 buildings highlighted **red**.

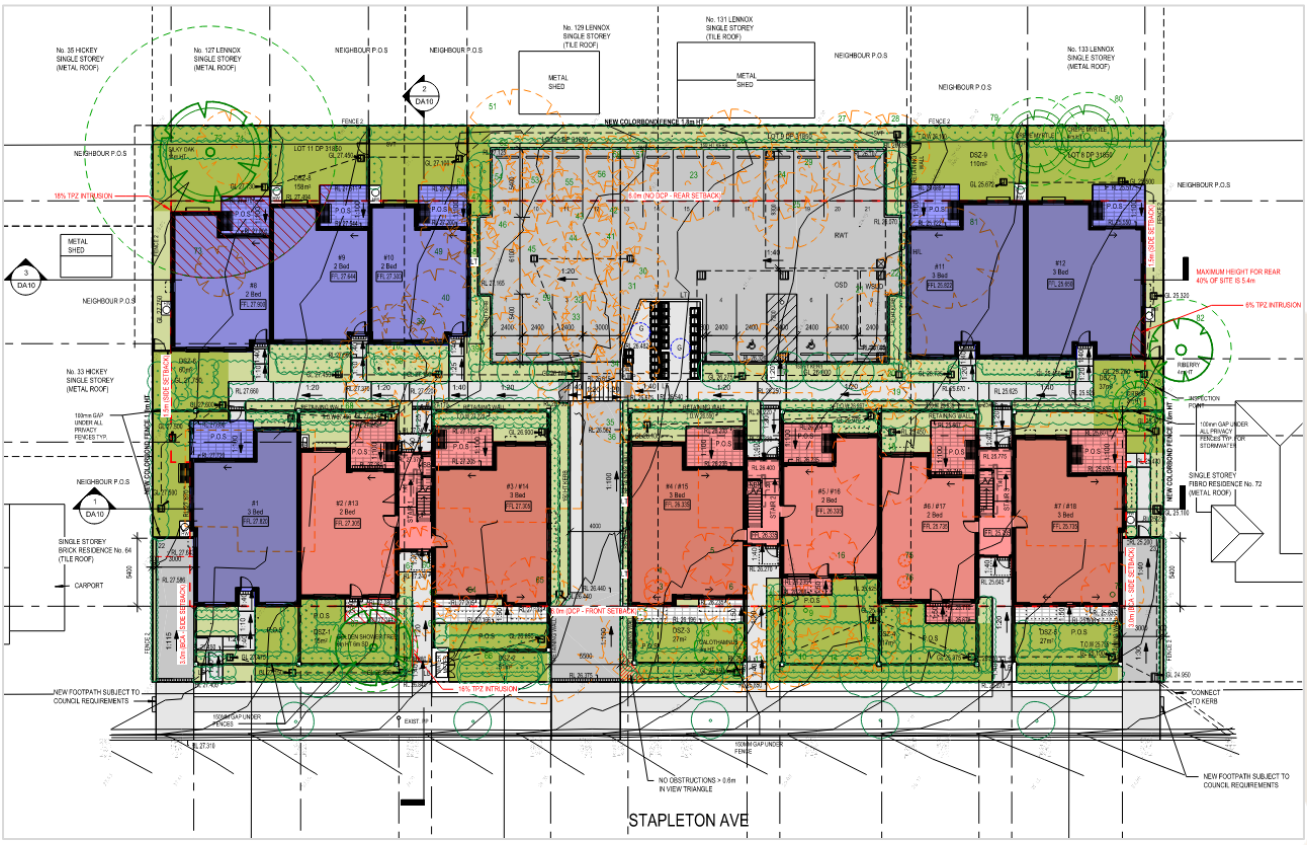

Figure 2.1 – Site plan

Pedestrian access to each Class 2 building is provided via corresponding accessways extending from the allotment boundary at Stapleton Avenue as well as from the accessible car spaces within the car parking area.

2.2 Classification/s

The building/s has been identified as having the following building classification/s –

Classification	Description
1a	Residential dwelling/s
2	Multi residential units

2.3 Rise in Storeys

The building is determined as having a rise in storeys of 2.

2.4 Effective Height

The Class 2 buildings have been determined as having an effective height of less than 12m.

2.5 Type of Construction

The Class 2 buildings have been determined as being of Type B Construction, on the basis the Class 2 buildings have a rise in storeys of 2.

2.6 Principal Pedestrian Entrance/s

Referring to Figure 2.2 below, the principal pedestrian entrance/s to the corresponding Class 2 building/s from the allotment boundary and from the accessible car spaces via the ground floor have been assessed as shown (highlighted **red**).

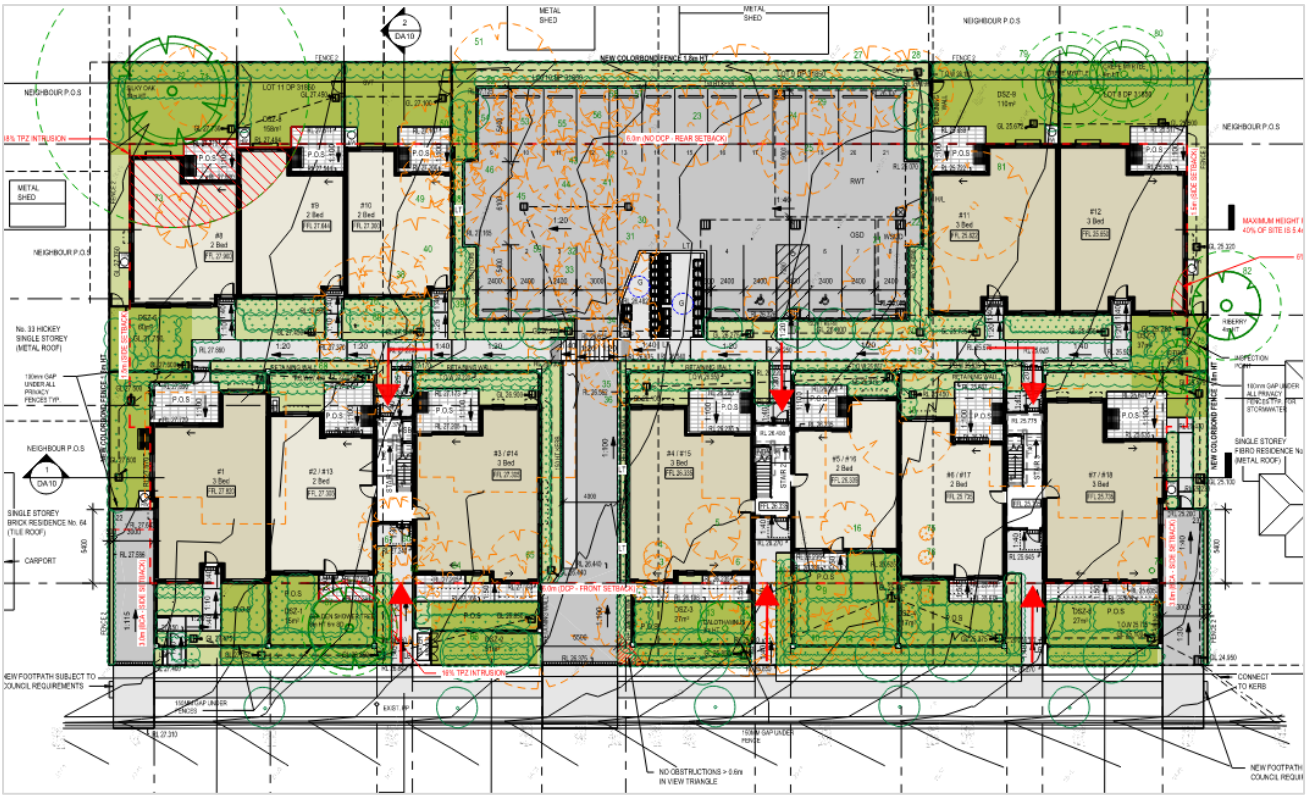

Figure 2.2 – Pedestrian entrance/s

Access to the building has been assessed further in D4D3 of the report.

2.7 Exemptions

The following areas have been identified as not required to be accessible in accordance with D4D5 of the BCA, based on the particular purpose for which it is to be used as well as the potential health or safety risk posed for people with a disability -

(a) Plant & Equipment Rooms; and

(b) Services Room.

3. Detailed Assessment

A detailed assessment of the proposed scope of works in the context of the applicable Deemed to Satisfy provisions of the Building Code of Australia (BCA) has been undertaken, as outlined below. The status of compliance against each applicable BCA clause assessed has adopted the following abbreviations-

C	Complies. The proposed design satisfies the requirements of the BCA clause.
CRA	Compliance readily achievable. There is insufficient information to determine that the proposed design satisfies all requirements of the BCA clause, however, may be satisfied by minor design amendments and/or design development.
DNC	Does not Comply. The proposed design does not satisfy the requirements of the BCA clause.
FIR	Further Information Required. There is insufficient information to undertake a detailed assessment of the proposed design against the BCA clause.
PS	Addressed by way of a Performance Solution prepared in accordance with A2G2 of the BCA.
PPS	Potential for Performance Solution prepared in accordance with A2G2 of the BCA.
Note	Information is provided to guide the reader and not as specific assessment of the BCA clause.
N/A	Not applicable. The requirements of the BCA clause do not apply.

SECTION D: ACCESS AND EGRESS			
Part D4 – Access for people with a disability			
BCA Clause		**Comment/s**	**Status**
D4D2	General building access requirements	Requirement/s Unless exempted by D4D5, access for people with a disability must be provided – (a) From a pedestrian entrance required to be accessible to at least 1 floor containing sole occupancy units and to the entrance doorway of each sole occupancy on that level; and (b) To and within not less than 1 of each type of room or space for use in common by the residents, including cooking facility, sauna, gymnasium, swimming pool, common laundry, games room, individual shop, eating area, or the like. (c) Where a ramp complying with AS 1428.1-2009 or a passenger lift is installed - (i) to the entrance doorway of each sole-occupancy unit; and (ii) to and within rooms or spaces for use in common by the residents, located on the levels served by the lift or ramp.	CRA

		Comment/s Access to entrance doorway of the ground floor storey of each Class 2 building as well as to and within each garbage room for use in common by the residents is to be provided in accordance with the requirements of AS1428.1-2009, which includes (but is not limited to) the following – (a) Doorway circulation spaces to the outside of entry doorways of units 2-7 only complying with Clause 13 of AS1428.1- 2009; and (b) Continuous accessible paths of travel (incl. turning spaces) complying with Clause 6 of AS1428,1-2009; and (c) Ground surfaces on continuous accessible paths of travel and circulation spaces complying with Clause 7 of AS1428.1-2009; and (d) Walkways complying with Clause 10.2 of AS1428.1-2009 (incl. edge protection requirements).	

Part D4 – Access for people with a disability

BCA Clause		Comment/s	Status
D4D3	Access to buildings	Requirement/s (a) An accessway complying with AS1428.1-2009 must be provided to the building - (i) from the main points of a pedestrian entry at the allotment boundary; and (ii) from any required accessible carparking space on the allotment. (b) In a building required to be accessible, an accessway must be provided through the principal pedestrian entrance and – (i) through not less than 50% of all pedestrian entrances including the principal pedestrian entrance; and (ii) in a building with a total floor area more than 500 m^2, a pedestrian entrance which is not accessible must not be located more than 50 m from an accessible pedestrian entrance, except for pedestrian entrances serving only areas exempted by D4D5.	CRA
		Comment/s Access to each building, extending from the corresponding pedestrian entrances at the allotment boundary as well as between buildings, is to be provided in accordance with the requirements of AS1428.1-2009, which includes (but is not limited to) the following – (a) Doorway circulation spaces and door hardware complying with Clause 13 of AS1428.1-2009; and (b) Continuous accessible paths of travel complying with Clause 6 of AS1428,1-2009; and (c) Ground surfaces on continuous accessible paths of travel and circulation spaces (incl. drainage grates) complying with Clause 7 of AS1428.1-2009; and (d) Walkways complying with Clause 10.2 of AS1428.1-2009 (incl. edge protection requirements).	

Part D4 – Access for people with a disability			
BCA Clause		**Comment/s**	**Status**
D4D4	Parts of buildings to be accessible	<u>Requirement/s</u> (a) any ramp and stairway, except for ramps and stairways in areas exempted by D4D5, must comply with— (i) for a ramp, clause 10 of AS1428.1-2009;. (ii) for a stairway, clause 11 of AS1428.1-2009. (b) accessways must have turning spaces complying with AS1428.1-2009 within 2m of the end of accessways where it is not possible to continue travelling along the accessway. (c) clause 7.4.1(a) of AS 1428.1-2009 does not apply and is replaced with 'the pile height or pile thickness shall not exceed 11 mm and the carpet backing thickness shall not exceed 4 mm'. (d) the carpet pile height or pile thickness dimension, carpet backing thickness dimension and their combined dimension shown in Figure 8 of AS 1428.1-2009 do not apply and are replaced with 11 mm, 4 mm and 15 mm respectively.	CRA
D4D5	Exemptions	Refer section 2.7 of this report for areas identified as not required to be accessible in accordance with this clause.	Note
D4D6	Accessible carparking	Not applicable. No accessible car spaces are required to be provided for the Class 2 buildings to satisfy BCA requirements. Refer Adaptable Housing Assessment Report prepared by this office for detailed commentary regarding the proposed accessible car spaces.	N/A
D4D7	Signage	<u>Requirement/s</u> Braille and tactile signage complying with Specification 15 must Identify each door required by E4D5 to be provided with an exit sign and state - (a) "Exit"; and (b) "Level"; and (c) the floor level number or floor level descriptor, or a combination of the two.	CRA
D4D8	Hearing augmentation	Not applicable.	N/A

Part D4 – Access for people with a disability			
BCA Clause		**Comment/s**	**Status**
D4D9	Tactile indicators	Tactile ground surface indicators complying with Sections 1 and 2 of AS/NZS 1428.4.1-2009 must be provided to warn people who are blind or have a vision impairment that they are approaching – (a) A stairway, other than a fire isolated stairway; and (b) A ramp, other than a fire isolated ramp, step ramp or kerb ramp; and (c) In the absence of a suitable barrier – (i) an overhead obstruction less than 2m above the floor level and an accessway meeting a vehicular way adjacent to any pedestrian entrance to a building; (ii) an accessway meeting a vehicular way adjacent to any pedestrian entrance to a building, excluding a pedestrian entrance serving an area referred to in D4D5, if there is no kerb or kerb ramp at that point.	CRA
D4D10	Wheelchair seating spaces in Class 9b assembly buildings	Not applicable.	N/A
D4D11	Swimming pools	Not applicable.	N/A
D4D12	Ramps	Not applicable.	N/A
D4D13	Glazing on an accessway	<u>Requirement/s</u> On an accessway, where there is no chair rail, handrail or transom, all frameless or fully glazed doors, sidelights and any glazing capable of being mistaken for a doorway or opening, must be clearly marked for their full width with a solid and non-transparent contrasting line in accordance with Clause 6.6 of AS1428.1-2009. Clause 6.6 of AS1428.1-2009 requires that the contrasting line shall be not less than 75 mm wide and shall extend across the full width of the glazing panel. The lower edge of the contrasting line shall be located between 900 mm and 1000 mm above the plane of the finished floor level. Any contrasting line on the glazing shall provide a minimum of 30% luminance contrast when viewed against the floor surface or surfaces within 2 m of the glazing on the opposite side.	CRA

SECTION E: SERVICES AND EQUIPMENT			
Part E3 – Lift installations			
BCA Clause		**Comment/s**	**Status**
E3D7	Passenger lift types and their limitations	Not applicable.	N/A
E3D8	Accessible features required for passenger lifts	Not applicable.	N/A

SECTION F: HEALTH AND AMENITY			
Part F4 – Sanitary and other facilities			
BCA Clause		**Comment/s**	**Status**
F4D5	Accessible sanitary facilities	Not applicable.	N/A
F4D6	Accessible unisex sanitary compartments	Not applicable.	N/A
F4D7	Accessible unisex showers	Not applicable.	N/A
F4D12	Accessible adult change facilities	Not applicable.	N/A

4. Conclusion

In concluding the review undertaken, it is considered that based on the documentation provided (as referenced in Annexure 1), the proposed scope of works is capable of complying with the relevant accessibility deemed to satisfy provisions and/or performance requirements of the Building Code of Australia (BCA) Volume 1 2022.

Where compliance is to be obtained via a performance-based solution for any BCA provision, it is considered that any such solution/s will not necessitate significant changes to the proposed design.

Nicolas Hurtado

Director | **NEST CONSULTING GROUP**

Grad.Dip. Fire Safety Engineering (UWS)
B.Eng. Construction (UTS)
Cert. IV Access Consulting (ATA)
AIBS Associate Member
ACAA Associate Member

ANNEXURE 1 – Documentation Assessed

This assessment is based on the following documentation –

Discipline	Architectural
Organisation	Brewster Murray
Documentation Type	Plans

Plan No.	Title	Revision	Date
DA04	SITE PLAN	D	17.10.2023
DA05	GROUND FLOOR PLAN	D	17.10.2023
DA06	FIRST FLOOR PLAN	D	17.10.2023

ANNEXURE 2 – Summary of Technical Requirements

REQUIREMENTS
CONTINUOUS ACCESSIBLE PATHS OF TRAVEL
(a) The minimum unobstructed height of a continuous accessible path of travel shall be 2000 mm or 1980 mm at doorways.
(b) Unless otherwise specified (such as at doors, curved ramps and similar), the minimum unobstructed width of a continuous accessible path of travel shall be 1000 mm.
FLOOR OR GROUND SURFACES ON CONTINUOUS ACCESSIBLE PATHS OF TRAVEL AND CIRCULATION SPACES
(a) Abutment of surfaces shall have a smooth transition. Design transition shall be 0 mm. Construction tolerances shall be as follows: (i) 0 ±3 mm vertical, as shown in Figure 6(a) of AS1428.1-2009. (ii) 0 ±5 mm, provided the edges have a bevelled or rounded edge to reduce the likelihood of tripping, as shown in Figure 6(b) of AS1428.1-2009. (b) Tolerances for raked joint pavers shall be as shown in Figure 7 of AS1428.1-2009.

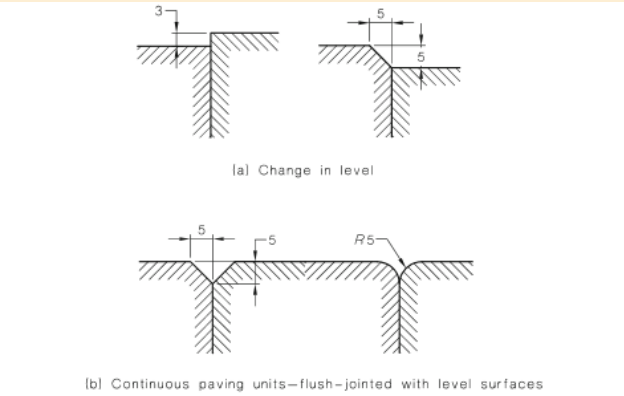

DIMENSIONS IN MILLIMETRES AND ARE MAXIMUM

FIGURE 6 ACCEPTABLE CONSTRUCTION TOLERANCES FOR ABUTMENT OF SURFACES

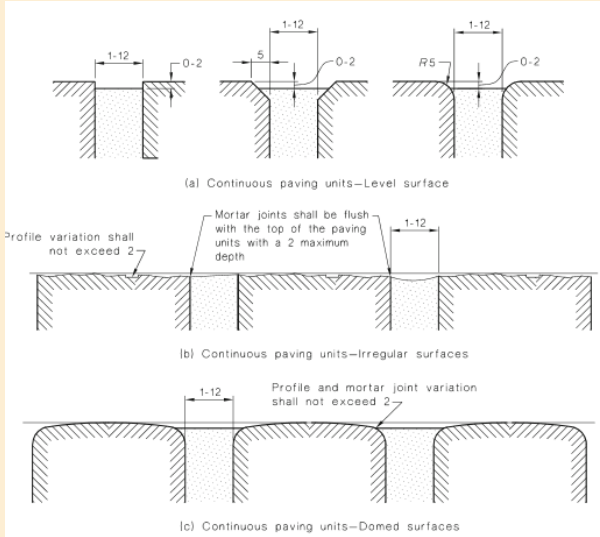

DIMENSIONS IN MILLIMETRES AND ARE MAXIMUM

FIGURE 7 RAKED JOINT PAVERS

(c) Where carpets or any soft flexible materials are used on the ground or floor surface—

(i) the pile height or pile thickness shall not exceed 11 mm and the carpet backing thickness shall not exceed 4 mm;

(ii) exposed edges of floor covering shall be fastened to the floor surface and shall have a trim along the entire length of any exposed edge; and

(iii) at the leading edges, carpet trims and any soft flexible materials shall have a vertical face no higher than 3 mm or a rounded bevelled edge no higher than 5 mm or above that height a gradient of 1 in 8 up to a total maximum height of 10 mm.

(d) Matting recessed within a continuous accessible path of travel—

(i) where of metal and bristle type construction or similar, its surface shall be no more 3 mm if vertical or 5 mm if rounded or bevelled, above or below the surrounding surface; and

(ii) where of a mat or carpet type material, shall have the fully compressed surface level with or above the surrounding surface with a level difference no greater than 3 mm if vertical or 5 mm if rounded or bevelled.

REQUIREMENTS
(e) Grates shall comply with the following: (i) Circular openings shall be not greater than 13 mm in diameter. (ii) Slotted openings shall be not greater than 13 mm wide and be oriented so that the long dimension is transverse to the dominant direction of travel. NOTE: Where slotted openings are less than 8 mm, the length of the slots may continue across the width of paths of travel.
WALKWAYS, RAMPS AND LANDINGS
(a) Walkways, ramps and landings that are provided on a continuous accessible path of travel shall be as follows: (i) Sharp transitions shall be provided between the planes of landings and ramps. (ii) Landings shall be provided at all changes in direction in accordance with Clause 10.8 of AS1428.1-2009. (iii) Landing or circulation space shall be provided at every doorway, gate, or similar opening. (iv) For walkways and landings having gradients in the direction of travel shallower than 1 in 33, a camber or crossfall shall be provided for shedding of water and shall be no steeper than 1 in 40, except that bitumen surfaces shall have a camber or crossfall no steeper than 1 in 33.
WALKWAYS
(a) Walkways shall comply with the following – (i) The floor or ground surface abutting the sides of the walkway shall provide a firm and level surface of a different material to that of the walkway at the same level of the walkway, follow the grade of the walkway and extend horizontally for a minimum of 600 mm unless one of the following is provided: (A) Kerb in accordance with Figure 18 of AS1428.1-2009. (B) Kerb rail and handrail in accordance with Figure 19 of AS1428.1-2009. (C) A wall not less than 450 mm in height. (ii) Walkways shall be provided with landings, as specified in Clause 10.8 of AS1428.1-2009, at intervals not exceeding the following: (A) For walkway gradients of 1 in 33, at intervals no greater than 25 m. (B) For walkway gradients of 1 in 20, at intervals no greater than 15 m. (C) For walkway gradients between 1 in 20 to 1 in 33, at intervals that shall be obtained by linear interpolation. NOTE: For walkways shallower than 1 in 33, no landings are required. (iii) The intervals specified above may be increased by 30% where at least one side of a walkway is bounded by— (A) a kerb or kerb rail as specified in Clause 10.3(j) of AS1428.1-2009 and a handrail as specified in Clause 12 of AS1428.1-2009; or (B) a wall and a handrail as specified in Clause 12 of AS1428.1-2009.
RAMPS
(a) Ramps shall comply with the following – (i) The maximum gradient of a ramp exceeding 1900 mm in length shall be 1 in 14. (ii) The gradient of a ramp shall be constant throughout its length with a maximum allowable tolerance of 3% provided no section of the ramp is steeper than 1 in 14.

REQUIREMENTS

(iii) Ramps shall be provided with landings, as specified in Clause 10.8, at the bottom and at the top of the ramp and at intervals not exceeding the following:

(A) For ramp gradients of 1 in 14, at intervals not greater than 9 m.

(B) For ramp gradients steeper than 1 in 20, at intervals not greater than 15 m.

(C) For ramp gradients between 1 in 14 and steeper than 1 in 20, at intervals that shall be obtained by linear interpolation.

(iv) Where ramps are constructed with a change in direction, the angle of approach shall create a 90° angle to the line of transition between the ramp surface and the landing surface.

(v) Ramps shall have a handrail complying with Clause 12 on each side of the ramp.

(vi) Where the intersection is at the property boundary, the ramp shall be set back by a minimum of 900 mm so that the handrail (complying with Clause 12 of AS1428.1-2009) and TGSIs do not protrude into the transverse path.

(vii) TGSIs shall be installed in accordance with AS 1428.4.1-2009.

(viii) Where the intersection is at an internal corridor, the ramp shall be set back by a minimum of 400 mm so that the handrail complying with Clause 12 of AS1428.1-2009 does not protrude into the transverse path of travel.

(ix) The handrail shall extend a minimum of 300 mm horizontally past the transition point at the top and bottom of the ramp except where the inner handrail is continuous at an intermediate landing.

(x) Ramps and intermediate landings shall have kerbs or kerb rails on both sides that comply with the following:

(A) The minimum height above the finished floor shall be 65 mm.

(B) The height of the top of the kerb or kerb rail shall not be within the range 75 mm to 150 mm above the finished floor, as shown in Figure 18 of AS1428.1-2009.

(C) There shall be no longitudinal gap or slot greater than 20 mm in the kerb or kerb rail within the range 75 mm to 150 mm above the finished floor.

(xi) Kerbs or kerb rails shall—

(A) be located so that the ramp-side face is either flush with the ramp-side face of the handrail or no greater than 100 mm away from the ramp-side face of the handrail, as shown in Figure 19 of AS1428.1-2009;

(B) where the handrail is supported on a vertical post, the height of the top of the kerb or kerb rail shall be not less than 150 mm above the finished floor, as shown in Figures 19(a), 19(b) or 19(c) of AS1428.1-2009; and

(C) where the kerb is at a height of 65 mm to 75 mm, the support posts shall be set back a minimum of 200 mm from the face of the kerb or kerb rail, as shown in Figure 19(d) of AS1428.1-2009.

(b) Threshold ramps at doorways on a continuous accessible path of travel shall have –

(i) a maximum rise of 35 mm;

(ii) a maximum length of 280 mm;

(iii) a maximum gradient of 1:8; and

(iv) be located within 20 mm of the door leaf which it serves,

(c) Step ramps shall have –

(i) A maximum rise of 190mm;

(ii) A length not greater than 1900mm; and

(iii) A gradient not steeper than 1 in 10.

REQUIREMENTS

(d) The edges of step ramp shall have a 45° splay where there is pedestrian cross-traffic. Otherwise, it shall be protected by a suitable barrier, such as –

- (i) A wall or suitable barrier with a minimum height of 450mm; or
- (ii) Where an open balustrade is provided a kerb or kerb rail shall be provided.

(e) Kerb ramps shall have –

- (i) A maximum rise of 190mm;
- (ii) A length not greater than 1520mm;
- (iii) A gradient not steeper than 1 in 8, located within or attached to a kerb.

(f) The length of landings at walkways (up to a gradient of 1 in 33) and ramps shall comply with one of the following –

- (i) Where there is no change in direction, the length shall be not less than 1200 mm, as shown in Figure 25(A).
- (ii) Where there is a change of direction not exceeding 90°, the landing shall be not less than 1500 mm. The internal corner shall be truncated for a minimum of 500 mm in both directions.
- (iii) For a 180° turn, the landing shall be not less than 1540mm x 2070mm.

(g) The length of landings at step ramps shall be not less than 1200 mm in the direction of travel. Where a change in direction is required, the length of step ramp landings shall be a minimum of 1500 mm. Where doorways are at landings, the dimensions of the landings shall be in accordance with the requirements of Clause 13.3 of AS1428.1-2009 for circulation spaces at doorways.

(h) The length of landings at kerb ramps shall be not less than 1200 mm in the direction of travel. Where a 'T' junction occurs, the kerb ramp landing shall be a minimum of 1500 × 2000 mm. Where a single change in direction is required, the ramp landings shall be a minimum of 1500 mm × 1500 mm.

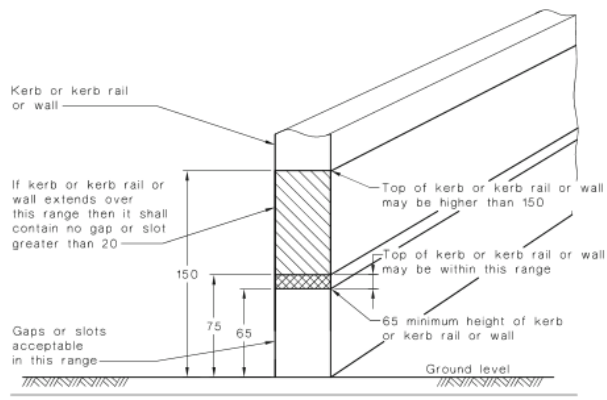

DIMENSIONS IN MILLIMETRES

FIGURE 18 KERB

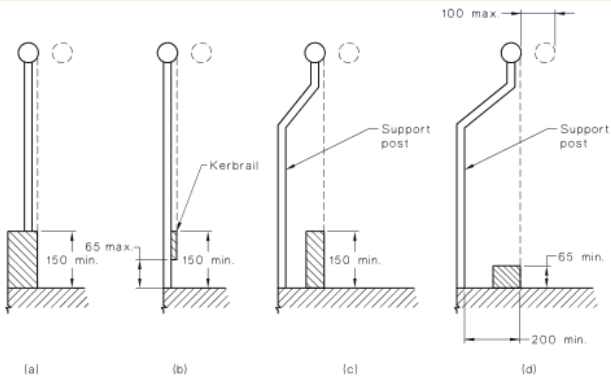

NOTE: See Appendix A for further clarification.

DIMENSIONS IN MILLIMETRES

FIGURE 19 SECTION SHOWING LOCATION OF KERB OR KERB RAIL IN RELATION TO HANDRAIL WITH VERTICAL SUPPORT

STAIRWAYS

(a) Where the intersection is at the property boundary, the stair shall be set back by a minimum of 900 mm so that the handrail and TGSIs do not protrude into the transverse path of travel.

(b) Where the intersection is at an internal corridor, the stair shall be set back.

(c) Stairs shall have opaque risers.

(d) Stair nosings shall not project beyond the face of the riser and the riser may be vertical or have a splay backwards up to a maximum 25 mm.

REQUIREMENTS

(e) Stair nosing profiles shall—

(i) have a sharp intersection;

(ii) be rounded up to 5 mm radius; or

(iii) be chamfered up to 5 mm × 5 mm.

(f) At the nosing, each tread shall have a strip not less than 50 mm and not more than 75 mm deep across the full width of the path of travel. The strip may be set back a maximum of 15 mm from the front of the nosing. The strip shall have a minimum luminance contrast of 30% to the background. Where the luminous contrasting strip is affixed to the surface of the tread, any change in level shall comply with Clause 7.2 and Clause 7.3 of AS1428.1-2009.

(g) Where the luminance contrasting strip is not set back from the front of the nosing then any area of luminance contrast shall not extend down the riser more than 10 mm.

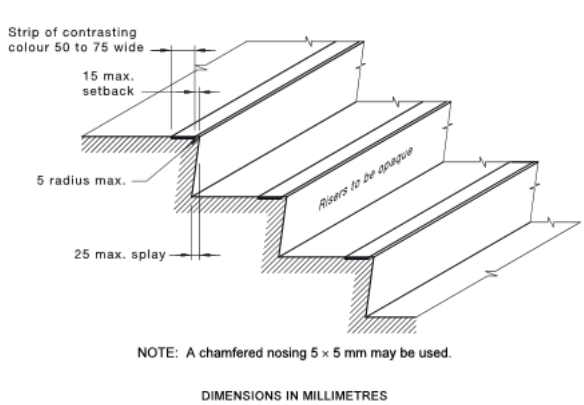

FIGURE 27(A) A TYPICAL STAIR NOSING PROFILE WITH NOSING STRIP

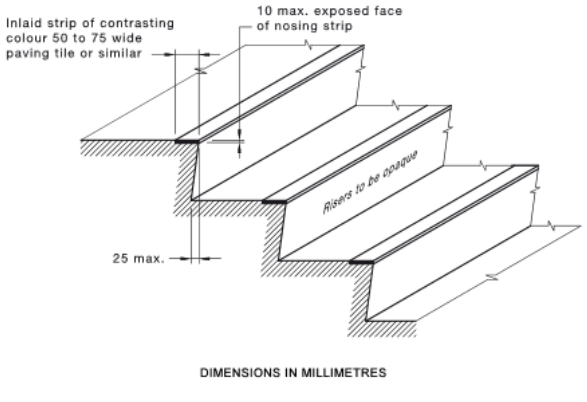

FIGURE 27(B) A TYPICAL STAIR NOSING PROFILE WITH EXPOSED NOSING STRIP

(h) TGSIs shall be installed in accordance with AS 1428.4.1-2009.

HANDRAILS

(a) Handrails shall be continuous throughout the stair flight and, where practicable, around landings and have no obstruction on or above up to a height of 600 mm and as follows –

(i) Installed on both sides of the stairs.

(ii) Handrails shall have no vertical sections and shall follow the angle of the stairway nosings.

(iii) Where a handrail terminates at the bottom of a flight of stairs, the handrail shall extend at least one tread depth parallel to the line of nosings plus minimum of 300 mm horizontally from the last riser.

(iv) The handrail shall extend a minimum of 300 mm horizontally past the nosing on the top riser.

(v) Where the handrail is continuous, the 300 mm extension is not required in the inner handrail at intermediate landings.

(vi) The dimensions indicating the heights of handrails shall be taken vertically from the nosing of the tread to the top of the handrail or from the landing to the top of the handrail.

REQUIREMENTS

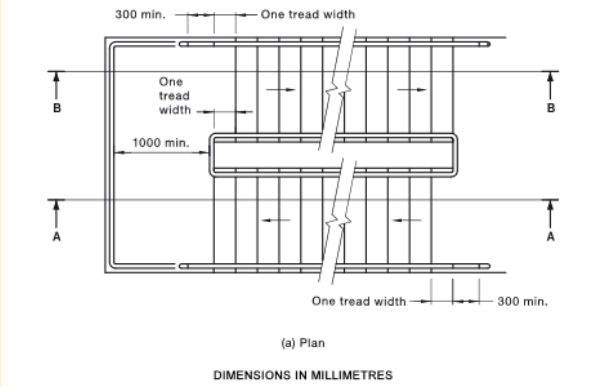

FIGURE 28 (in part) HANDRAILS TO STAIRS WITH INTERMEDIATE LANDINGS

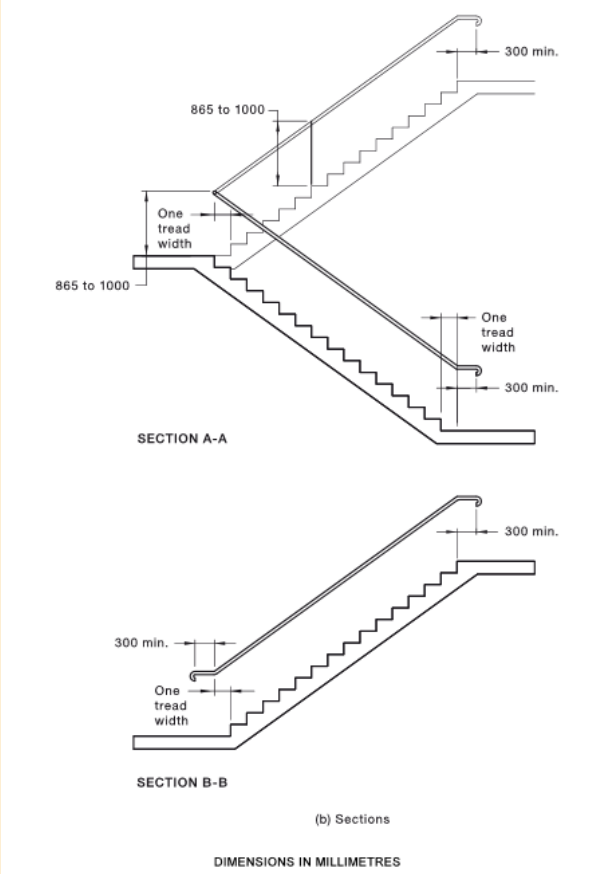

FIGURE 28 (in part) HANDRAILS TO STAIRS WITH INTERMEDIATE LANDINGS

(b) Handrails and balustrades shall not encroach into required circulation spaces.

(c) The cross-section of handrails shall be circular or elliptical, not less than 30 mm or greater than 50 mm in height or width for not less than 270° around the uppermost surface. Elliptical handrails shall have the greater dimension in the horizontal axis.

(d) Exposed edges at ends and corners of handrails shall have a radius of not less than 5 mm.

(e) The top of handrails shall be not less than 865 mm nor more than 1000 mm above the nosing of stairway tread or the plane of the finished floor of the walkway, ramp or landing.

(f) The height of the top of the handrail, measured in accordance with Item (d), shall be consistent through the ramp (or stairs) and any landings.

REQUIREMENTS

(g) If a balustrade is required at a height greater than the handrail, both shall be provided.

(h) Handrails shall be securely fixed and rigid, and their ends shall be turned through a total of 180°, or to the ground, or returned fully to end post or wall face.

(i) The clearance between a handrail and an adjacent wall surface or other obstruction shall be not less than 50 mm. This clearance shall extend above the top of the handrail by not less than 600 mm.

(j) Handrails shall have no obstruction to the passage of a hand along the rail.

(k) The inside handrail at landings shall always be continuous.

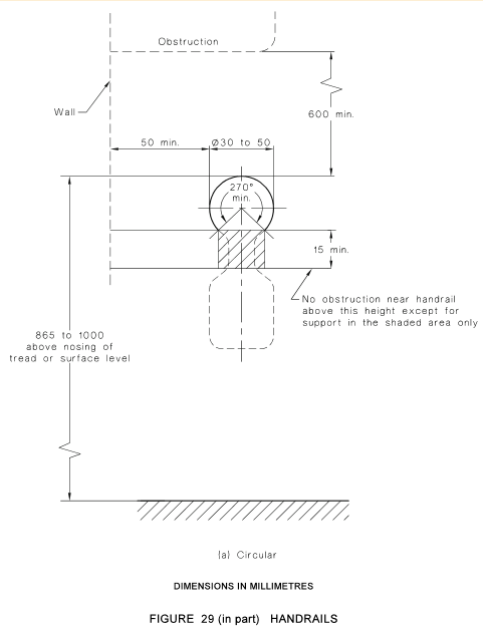

FIGURE 29 (in part) HANDRAILS

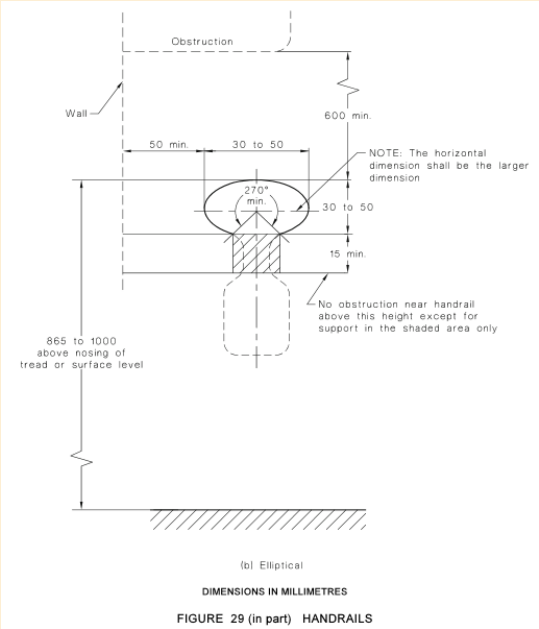

FIGURE 29 (in part) HANDRAILS

DOORWAYS, DOORS AND CIRCULATION SPACE AT DOORWAYS

(a) All doorways on a continuous accessible path of travel shall have a minimum luminance contrast of 30% over a minimum width of not less than 50mm, between –

- (i) door leaf and door jamb;
- (ii) door leaf and adjacent wall;
- (iii) architrave and wall;
- (iv) door leaf and architrave; or
- (v) door jamb and adjacent wall.

(b) The minimum clear opening of a doorway on a continuous accessible path of travel shall be 850 mm when measured from the face of the opened door to the doorstop. Where double doors are used, the 850 mm minimum clear opening shall apply to the active leaf.

(c) Circulation spaces at doorways shall have a gradient and crossfall not steeper than 1 in 40.

(d) Doorway circulation spaces shall be used in combination to allow access through doorways in both directions, as shown in Figures 31 and 32.

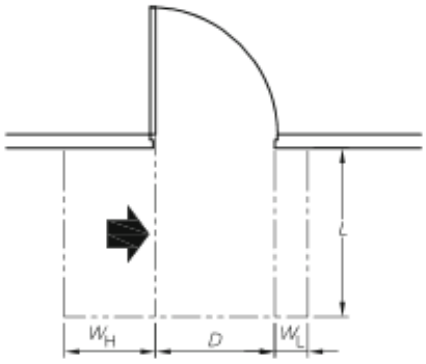

Dimension D	Dimension L	Dimension W_H	Dimension W_L
850	1220	560	340
900	1185	510	340
950	1160	460	340
1000	1140	410	340

(a) Hinge-side approach, door opens away from user

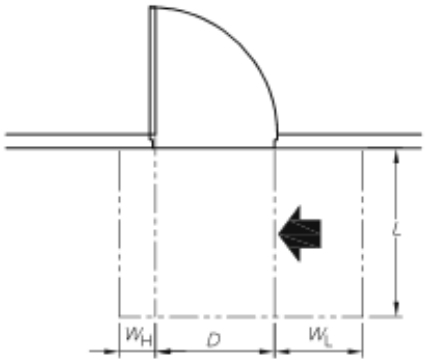

Dimension D	Dimension L	Dimension W_H	Dimension W_L
850	1240	240	660
900	1210	190	660
950	1175	140	660
1000	1155	90	660

(b) Latch-side approach, door opens away from user

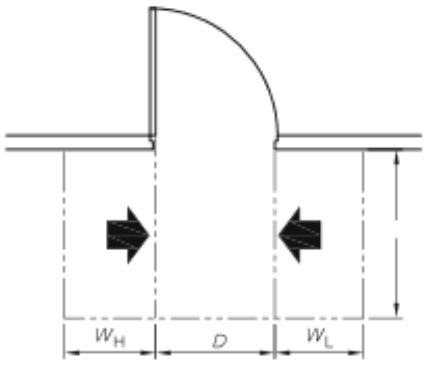

Dimension D	Dimension L	Dimension W_H	Dimension W_L
850	1240	560	660
900	1210	510	660
950	1175	460	660
1000	1155	410	660

(c) Either side approach, door opens away from user

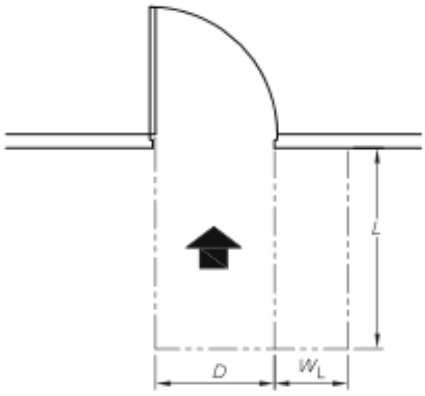

Dimension D	Dimension L	Dimension W_H	Dimension W_L
850	1450	0	510
900	1450	0	510
950	1450	0	510
1000	1450	0	510

(d) Front approach, door opens away from user

LEGEND:
D = Clear opening of width of doorway
L = Length
W_H = Width—hinge side
W_L = Width—latch side
➡ = Direction of approach
---- = Circulation space

DIMENSIONS IN MILLIMETRES

FIGURE 31 (in part) CIRCULATION SPACES AT DOORWAYS WITH SWINGING DOORS

REQUIREMENTS

(e) Door handles and related hardware and accessories shall comply with the following:

(i) The door handle and related hardware shall be of the type that allows the door to be unlocked and opened with one hand. The handle shall be such that the hand of a person who cannot grip will not slip from the handle during the operation of the latch.

(ii) The clearance between the handle and the back plate or door face at the centre grip section of the handle shall be not less than 35 mm and not more than 45 mm.

(iii) 'D' type handles shall be provided on sliding doors.

(iv) Where snibs are installed, they shall have a lever handle of a minimum length of 45 mm from the centre of the spindle.

(v) For doors other than fire doors and smoke doors where a door closer is fitted, the force required at the door handle to operate the door shall not exceed the following:

(A) To initially open the door..... 20 N

(B) To swing or slide the door .....20 N.

(C) To hold the door open between 60° and 90°.....20 N.

(vi) Where an outward opening door is not self-closing, a horizontal handrail or pull bar shall be fixed on the closing face of a side-hung door, as shown in Figure 36 of AS1428.1-2009.

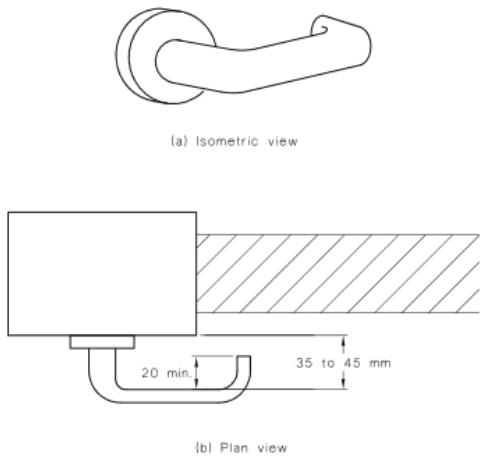

FIGURE 35(A) EXAMPLE OF ACCEPTABLE DOOR HARDWARE FOR HINGED DOORS

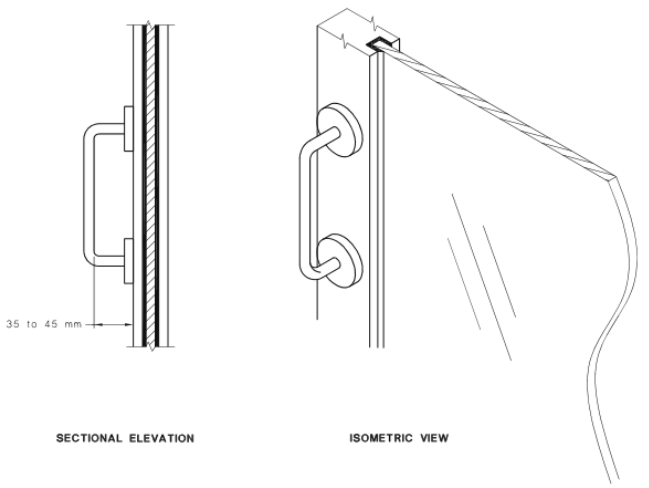

FIGURE 35(B) EXAMPLE OF ACCEPTABE DOOR HARDWARE FOR SLIDING DOORS

REQUIREMENTS

(f) Controls that need to be grasped or turned shall be not less than 900 mm and not more than 1100 mm above the plane of the finished floor.

(g) Controls that only need to be pushed, such as panic bars on egress routes, shall be not less than 900 mm, and not greater than 1200 mm above the plane of the finished floor.

(h) Controls that only need to be touched shall be not less than 900 mm, and not greater than 1250 mm above the plane of the finished floor, and not less than 500 mm from an internal corner except as specified in AS 1735.12-1999.

(i) Handles on sliding doors shall be not less than 60 mm from the door jamb or doorstop when in the open or closed position.

(j) Manual controls to power-operated doors shall be located on the continuous accessible path of travel no closer than 500 mm from an internal corner and between 1000 mm to 2000 mm from the hinged door leaf in any position or clear of a surface-mounted sliding door in the open position.

SANITARY FACILITIES

(a) Water taps shall comply with the following:

- (i) Taps shall have lever handles, sensor plates, or other similar controls.
- (ii) Lever handles shall have not less than 50 mm clearance from an adjacent surface.
- (iii) Where separate taps are provided for hot and cold water, the hot water tap shall be placed to the left of the cold water tap for horizontal configurations, or above the cold water tap for vertical configurations.
- (iv) Where hot water is provided, the water shall be delivered through a mixing spout.

(b) WC pan clearances, including set-out, seat height and seat width shall be as shown in Figure 38 of AS1428.1-2009.

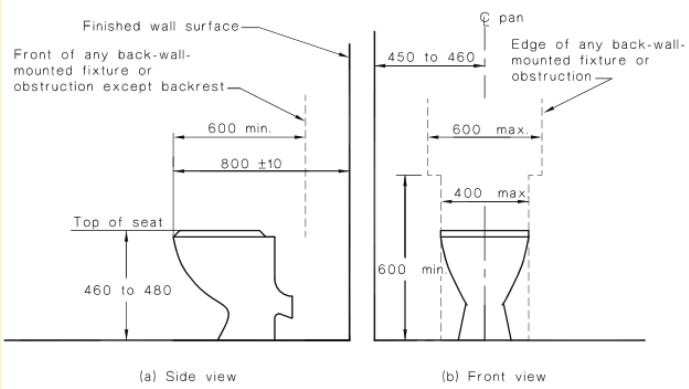

NOTES:

1 For the purpose of dimensioning, the front of the WC pan has been taken as the datum plane.

2 The dimension of 800 ±10 mm from the front of the WC pan to the wall is a critical dimension.

DIMENSIONS IN MILLIMETRES

FIGURE 38 WATER CLOSET PAN CLEARANCES, SEAT HEIGHT AND SEAT WIDTH

(c) A toilet seat shall be provi ded on accessible toilets. The toilet seat shall-

- (i) be of the full-round type, (i.e., not open fronted) and with minimal contours to
- (ii) the top surface;
- (iii) be securely fixed in position when in use;
- (iv) have seat fixings that create lateral stability for the seat when in use;
- (v) be load-rated to 150 kg; and
- (vi) have a minimum luminance contrast of 30% with the background (e.g., pan, wall or floor against which it is viewed).

(d) A backrest shall be provided on accessible toilets. The backrest shall—

(i) be capable of withstanding a force in any direction of 1100 N;

(ii) have a height, at the lower edge of backrest to the top of the WC seat, of 120 mm to 150 mm;

(iii) have a vertical height of 150–200 mm and a width of 350–400 mm; and

(iv) the front edge of the centre of the backrest be positioned to achieve an angle of between 95° to 100° back from the seat hinge.

(e) Flushing controls shall be user activated, either hand operated or automatic. Where hand-operated flushing controls are used, they shall be located within the zone shown in Figure 40 of AS1428.1-2009 or centred on the centre-line of the toilet, wholly within the vertical limits of that zone. The position of the flushing control within this zone shall not be within the area required for any grabrails or backrest. The flushing control shall be proud of the surface and shall activate the flush before the button becomes level with the surrounding surface.

(f) The outlet for the toilet paper dispenser shall be located within the zone specified in Figure 41 of AS1428.1-2009. The toilet paper dispenser shall not encroach upon the clearance space required around the grabrail specified in Clause 15.2.7 of AS1428.1-2009.

(g) Where a concealed or high-level cistern or flush valve is used, a continuous grabrail, as specified in Clause 17 of AS1428.1-2009, shall be provided across the rear wall and side wall nearest the WC pan, as shown in Figure 42 of AS1428.1-2009. Where a low-level non-concealed cistern or flush valve is used, the grabrail shall be terminated at each side of the cistern, as shown in Figure 42 of AS1428.1-2009.

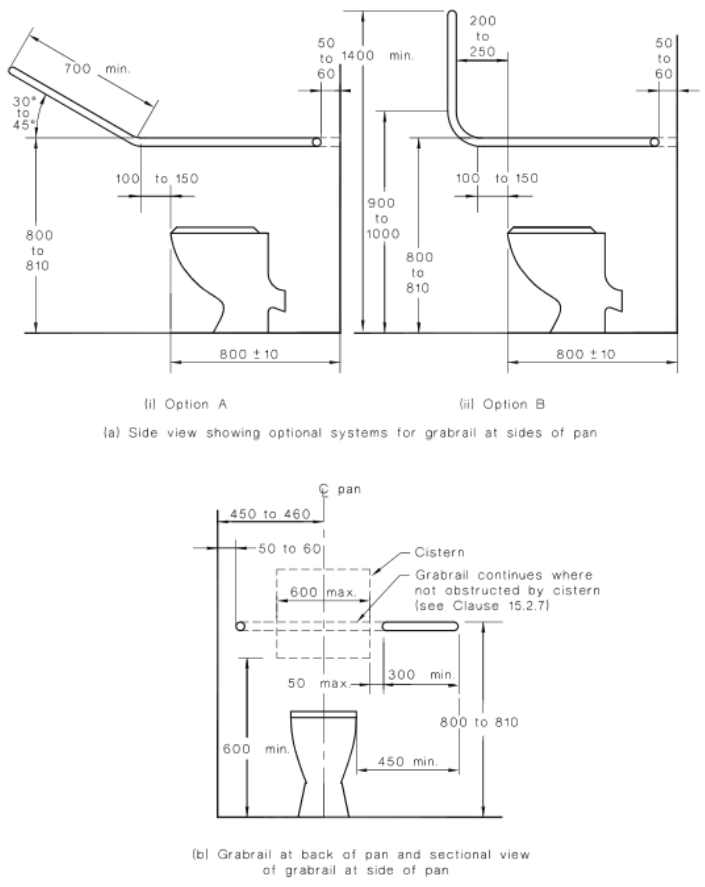

FIGURE 42 POSITIONS OF GRABRAILS IN WATER CLOSETS

REQUIREMENTS

(h) For each WC, the unobstructed circulation space from the finished floor to a height of not less than 2000 mm shall be as shown in Figure 43 of AS1428.1-2009, except for the following, which are allowed to intrude into the circulation space:

(i) The toilet paper dispenser - see Clause 15.2.6 of AS1428.1-2009.

(ii) Grabrails - see Clause 15.2.7 of AS1428.1-2009.

(iii) Washbasin limited to 100 mm intrusion as shown in Figure 43 of AS1428.1-2009.

(iv) Hand dryers and towel dispensers.

(v) Soap dispensers - Clause 15.4.3 of AS1428.1-2009.

(vi) Shelves - Clause 15.4.2 of AS1428.1-2009.

(vii) Wall cabinets, where provided, which shall not protrude more than 150 mm into the circulation space. The mounting of wall cabinets shall be at least 900 mm above floor level and the top shelf shall be a maximum of 1250 mm above floor level.

(viii) Clothes hanging devices - see Clause 15.4.4 of AS1428.1-2009.

(ix) Portable sanitary disposal unit as shown in Figure 43 of AS1428.1-2009.

(x) Other wall mounted fixtures, such as dispensing units and sharps disposal units, which shall have 900 mm minimum height clearance from the finished floor level and a maximum projection of 150 mm from finished wall surface.

The overlapping of circulation spaces shall be in accordance with Clause 15.6 of AS1428.1-2009.

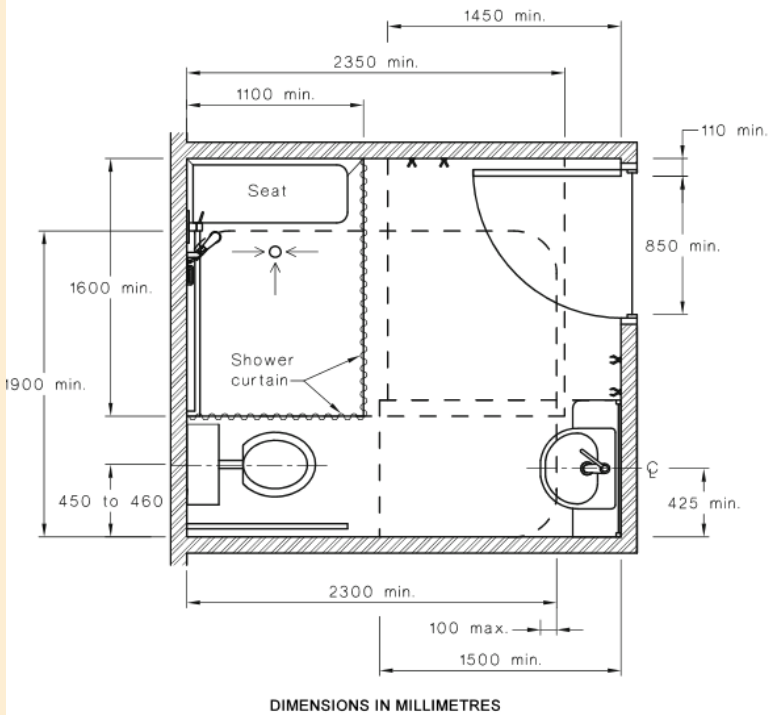

FIGURE 50 SANITARY COMPARTMENT SHOWING OVERLAP OF WASHBASIN FIXTURE INTO SHOWER CIRCULATION SPACE

(i) Where installed, baby change tables shall—

(i) not encroach into the circulation space of any other toilet facility when in the folded up position; and

(ii) have a maximum height of 820 mm and a minimum clearance underneath of 720 mm when in the open position.

REQUIREMENTS

(j) WC doors may be either hinged or sliding. WC doors shall comply with the following:

(i) Outward-opening doors shall have a mechanism that holds the door in a closed position without the use of a latch.

(ii) Doors shall be provided with an in-use indicator and a bolt or catch. Where a snib catch is used, the snib handle shall have a minimum length of 45 mm from the centre of the spindle. In an emergency, the latch mechanism shall be openable from the outside.

(iii) The force required to operate the door shall be in accordance with Clause 13.5.2(e) of AS1428.1-2009.

(iv) Door handles and hardware shall be in accordance with Clause 13.5 of AS1428.1-2009.

(k) A hand-washing facility shall be provided inside the toilet cubicle and shall form part of the accessible unisex facility.

(l) The installation of washbasins shall comply with the following:

(i) The washbasin shall be outside the pan circulation space as shown in Figure 43 of AS1428.1-2009.

(ii) Water taps shall comply with Clause 15.2.1 of AS1428.1-2009.

(iii) Exposed hot water supply pipes shall be insulated or located so as not to present a hazard.

(iv) The projection of the washbasin from the wall and the position of taps, bowl and drain outlet shall be determined in accordance with Figures 44(A) and 44(B) of AS1428.1-2009; except in sole-occupancy units, where Figure 45 of AS1428.1-2009 shall apply.

(v) Water supply pipes and waste outlet pipes shall not encroach on the required clear space under the washbasin.

For each washbasin fixture, the unobstructed circulation space shall be as shown in Figure 46 of AS1428.1-2009; except in sole occupancy units, where Figure 45 of AS1428.1-2009 shall apply. The washbasin fixture and its fittings are the only fixtures permitted in this space.

(m) In all sanitary facilities, the mirror shall be located either above or adjacent to the washbasin.

Where provided, a vertical mirror with a reflective surface not less than 350 mm wide shall extend from a height of not more than 900 mm to a height of not less than 1850 mm above the plane of the finished floor. Where provided, a second vertical mirror shall extend from a height of not less than 600 mm to a height of not less than 1850 mm above the plane of the finished floor.

(n) Shelf space shall be provided adjacent to the washbasin in one of the following ways:

(i) As a vanity top at a height of 800 mm to 830 mm and a minimum width of 120 mm and depth of 300 mm to 400 mm without encroaching into any circulation space.

(ii) As a separate fixture—

(A) within any circulation space at a height of 900 mm to 1000 mm with a width of 120 mm to 150 mm and length of 300 mm to 400 mm; and

(B) external to all circulation spaces at a height of 790 mm to 1000 mm with a minimum width of 120 mm and minimum length of 400 mm.

(o) Where provided, soap dispensers, towel dispensers, hand dryers and similar fittings shall be operable by one hand, and shall be installed with the height of their operative component or outlet not less than 900 mm and not more than 1100 mm above the plane of the finished floor, and no closer than 500 mm from an internal corner.

(p) A clothes-hanging device shall be installed 1200 mm to 1350 mm above the plane of the finished floor and not less than 500 mm out from any internal corner.

(q) Where provided, the sanitary disposal unit shall be located as a portable unit as shown in Figure 43 of AS1428.1-2009 or as a recessed unit within 500 mm from the pan.

(r) Where provided near the washbasin, switches and general purpose outlets shall be located in accordance with Clause 14 of AS1428.1-2009 and as close to the shelf or worktop as practicable.

REQUIREMENTS

(s) Shower recesses and the circulation space for each shower recess from the finished floor to a height of not less than 900 mm shall be as shown in Figure 47 of AS1428.1-2009. Grabrails, shower hose fittings; taps, soap holder, shelf (if provided) and the folding seat are the only fixtures permitted in these spaces.

(t) Shower recess fittings shall be provided as shown in Figures 47 and 48 of AS1428.1-2009. Not less than two clothes-hanging devices, as specified in Clause 15.4.4 of AS1428.1-2009, shall be fitted outside the shower recess. One such device shall be located within 400 ±10 mm and the other within 600 ±10 mm of the folding seat.

(u) The requirements for the floor and waste outlet are as follows:

(i) The floor of the shower recess and associated circulation space shall be self- draining and without a step-down, raised step kerb or hob at the entry to the recess.

(ii) The waste outlet for the shower shall be provided in accordance with Figure 47 of AS1428.1-2009.

(iii) The slope of the floor of the shower recess shall have a gradient between 1 in 60 and 1 in 80, as shown in Figure 49 of AS1428.1-2009.

(iv) The slope of floor of the remainder of the sanitary facility shall have a gradient between 1 in 80 and 1 in 100, as shown in Figure 49 of AS1428.1-2009.

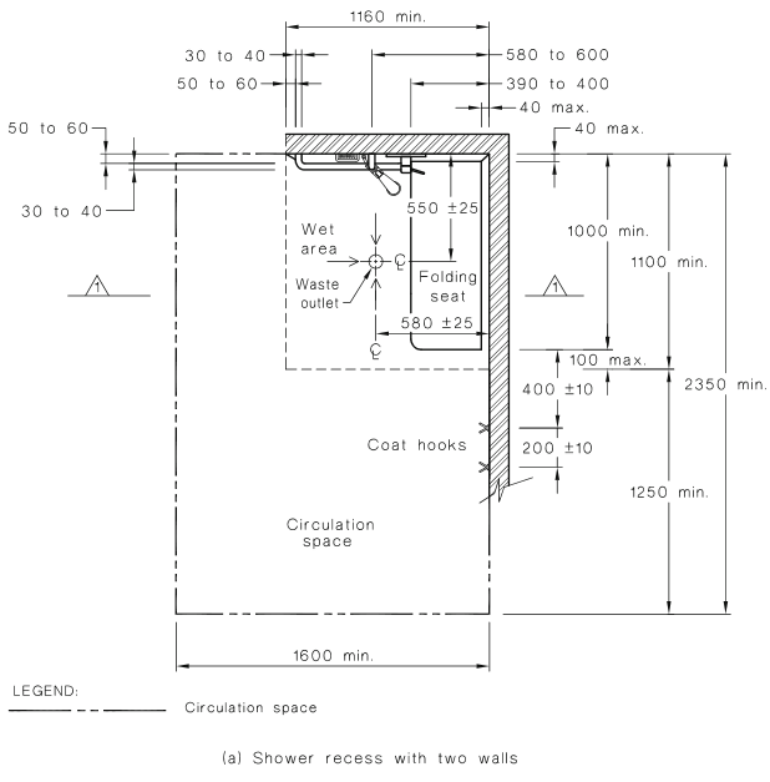

(a) Shower recess with two walls

DIMENSIONS IN MILLIMETRES

FIGURE 47 (in part) SHOWER RECESS AND CIRCULATION SPACE—PLAN

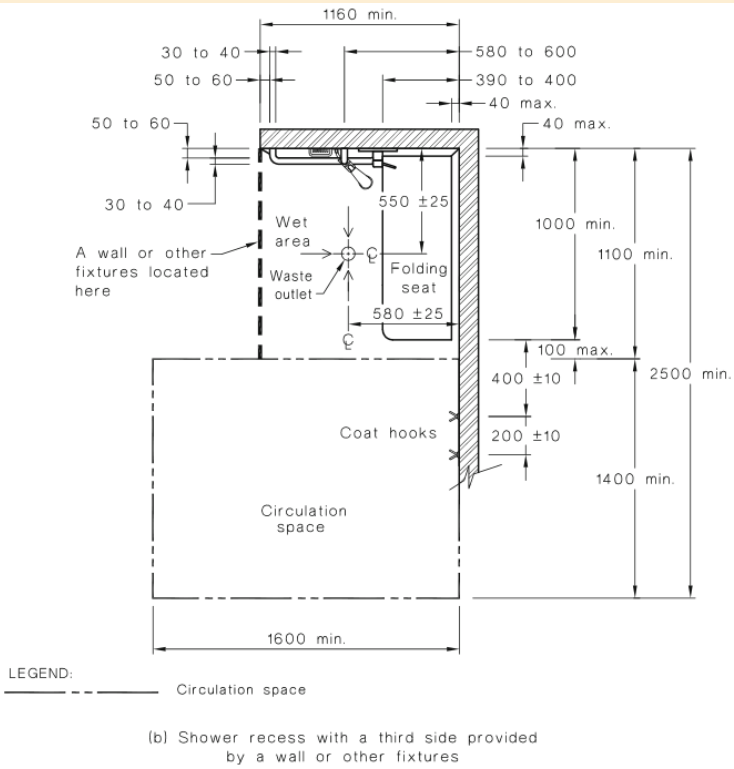

(b) Shower recess with a third side provided by a wall or other fixtures

FIGURE 47 (in part) SHOWER RECESS AND CIRCULATION SPACE—PLAN

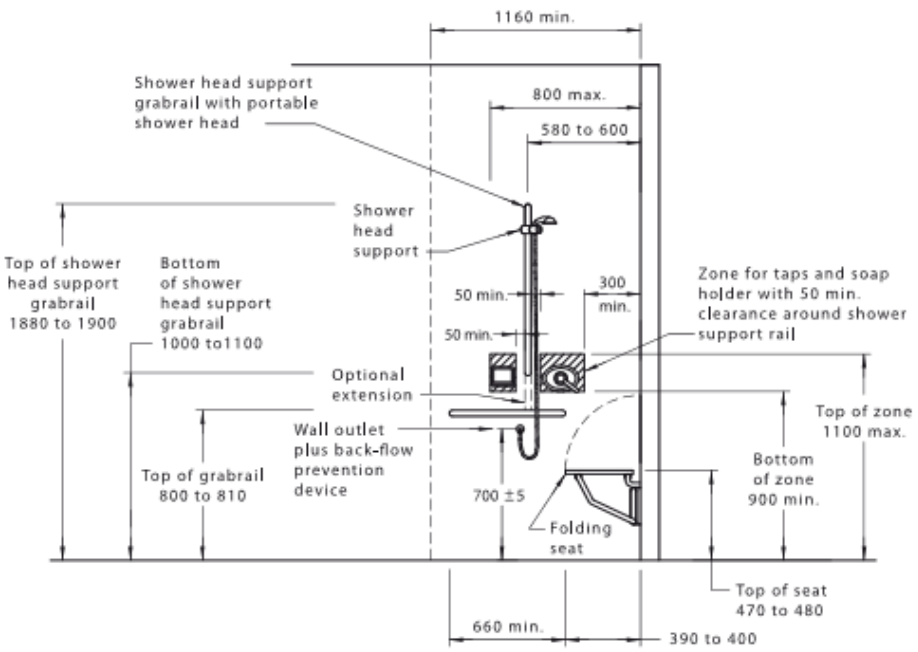

DIMENSIONS IN MILLIMETRES

FIGURE 48 SHOWER RECESS FITTINGS—ELEVATION

REQUIREMENTS

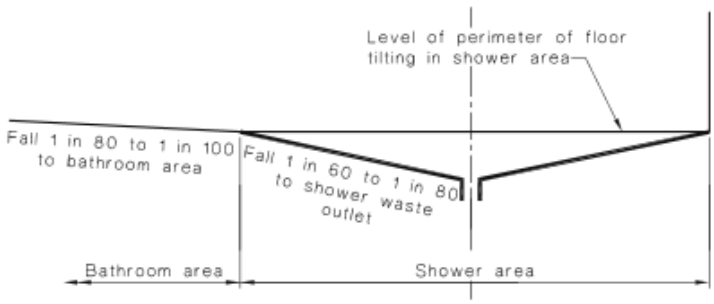

FIGURE 49 GRADES FOR BATHROOM AND SHOWER FLOORS

(v) The circulation spaces in accessible sanitary facilities shall be in accordance with Clause 15.2.8 and Figures 43 to 47 and 50 of AS1428.1-2009.

(w) Sanitary compartments for people with ambulant disabilities shall be in accordance with Figures 53(A) and 53(B) of AS1428.1-2009, with grabrails shall be installed in accordance with Clause 17 and Figure 53(A).

(x) Doors to sanitary compartments for people with ambulant disabilities shall have –

(i) openings with a minimum clear width of 700 mm, and shall comply with Figure 53(B); and

(ii) an in-use indicator and a bolt or catch. Where a snib catch is used, the snib handle shall have a minimum length of 45 mm from the centre of the spindle. In an emergency, the latch mechanism shall be openable from the outside.

(y) A coat hook shall be provided within the sanitary compartment and at a height between 1350 mm to 1500 mm from the floor.

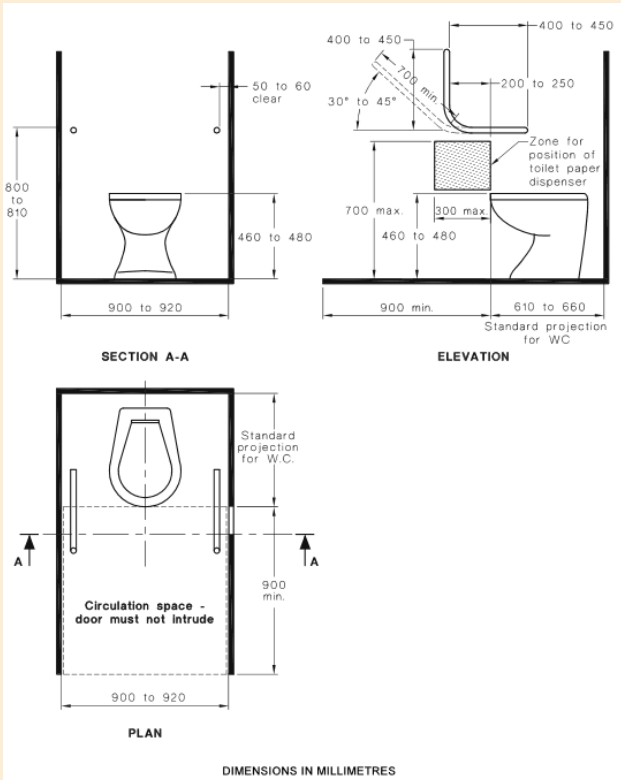

FIGURE 53(A) SANITARY COMPARTMENT FOR PEOPLE WITH AMBULANT DISABILITIES—PLAN AND ELEVATION

REQUIREMENTS

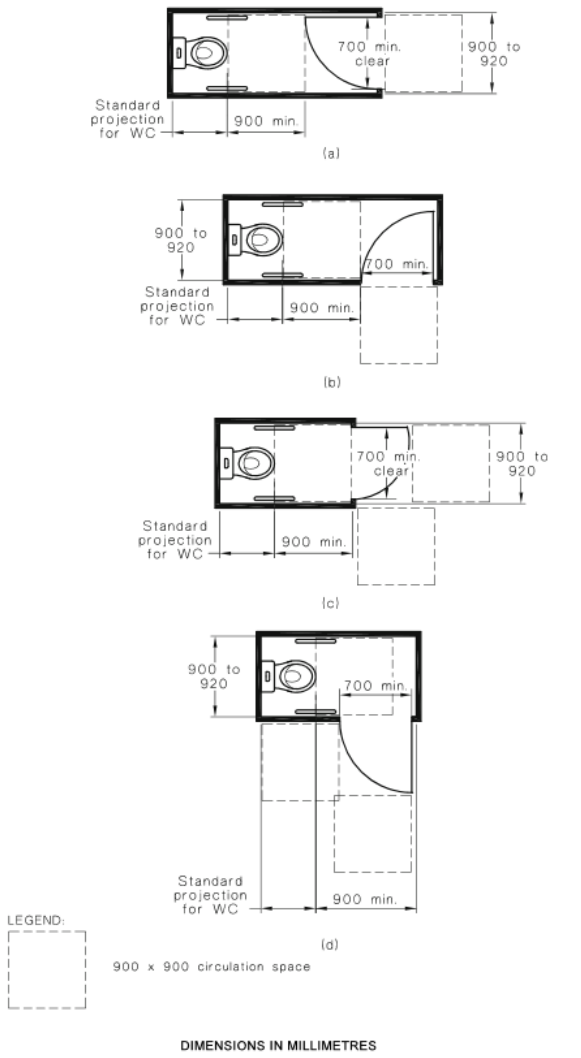

FIGURE 53(B) SANITARY COMPARTMENT FOR PEOPLE WITH AMBULANT DISABILITIES—DOORWAY OPTIONS

GRABRAILS

(a) Grabrails shall be not less than 30 mm and not more than 40 mm outside diameter; or they shall have a sectional shape within the limits of 30 mm to 40 mm diameter.

(b) Exposed edges and corners of grabrails shall have a radius of not less than 5 mm.

(c) The fastenings and the materials and construction of grabrails shall be able to withstand a force of 1100 N applied at any position and in any direction without deformation or loosening or rotation of the fastenings or fittings.

(d) The clearance between a grabrail and the adjacent wall surface or other obstruction shall be not less than 50 mm and not more than 60 mm. The clearance above a horizontal grabrail shall extend above the top of the grabrail by not less than 600 mm. The clearance below a horizontal or angled rail shall be a minimum of 50 mm except at fixing points.

(e) Grabrails shall be fixed so that there is no obstruction to the passage of the hand along the top 270° arc of horizontal and angled grabrails. There shall be no obstruction to the passage of the hand for the full length of vertical grabrails.